# MSP432P401R, MSP432P401M Mixed-Signal Microcontrollers

## 1 Device Overview

### 1.1 Features

- Core
  - ARM® 32-Bit Cortex®-M4F CPU With Floating-Point Unit and Memory Protection Unit
  - Frequency up to 48 MHz
  - ULPBench™ Benchmark:
    - 192.3 ULPMark™-CP
  - Performance Benchmark:
    - 3.41 CoreMark/MHz
    - 1.22 DMIPS/MHz (Dhrystone 2.1)
- Memories
  - Up to 256KB of Flash Main Memory (Organized Into Two Banks Enabling Simultaneous Read/Execute During Erase)
  - 16KB of Flash Information Memory (Used for BSL, TLV, and Flash Mailbox)
  - Up to 64KB of SRAM (Including 6KB of Backup Memory)
  - 32KB of ROM With MSP432™ Peripheral Driver Libraries
- Operating Characteristics
  - Wide Supply Voltage Range: 1.62 V to 3.7 V
  - Temperature Range (Ambient): –40°C to 85°C
- Ultra-Low-Power Operating Modes
  - Active: 80 µA/MHz
  - Low-Frequency Active: 83 µA at 128 kHz (Typical)
  - LPM3 (With RTC): 660 nA (Typical)
  - LPM3.5 (With RTC): 630 nA (Typical)
  - LPM4: 500 nA (Typical)
  - LPM4.5: 25 nA (Typical)
- Flexible Clocking Features
  - Tunable Internal DCO (up to 48 MHz)
  - 32.768 kHz Low-Frequency Crystal Support (LFXT)
  - High-Frequency Crystal Support (HFXT) up to 48 MHz
  - Low-Frequency Internal Reference Oscillator (REFO)
  - Very Low-Power Low-Frequency Internal Oscillator (VLO)
  - Module Oscillator (MODOSC)
  - System Oscillator (SYSOSC)
- Code Security Features
  - JTAG and SWD Lock
  - IP Protection (up to Four Secure Flash Zones, Each With Configurable Start Address and Size)
- Enhanced System Features
  - Programmable Supervision and Monitoring of Supply Voltage
  - Multiple-Class Resets for Better Control of Application and Debug
  - 8-Channel DMA
  - RTC With Calendar and Alarm Functions
- Timing and Control
  - Up to Four 16-Bit Timers, Each With up to Five Capture, Compare, PWM Capability
  - Two 32-Bit Timers, Each With Interrupt Generation Capability
- Serial Communication
  - Up to Four eUSCI_A Modules
    - UART With Automatic Baud-Rate Detection
    - IrDA Encode and Decode
    - SPI (up to 16 Mbps)
  - Up to Four eUSCI_B Modules
    - $I^2C$ (With Multiple-Slave Addressing)
    - SPI (up to 16 Mbps)
- Flexible I/O Features
  - Ultra-Low-Leakage I/Os (±20 nA Maximum)
  - All I/Os With Capacitive-Touch Capability
  - Up to 48 I/Os With Interrupt and Wake-up Capability
  - Up to 24 I/Os With Port Mapping Capability
  - Eight I/Os With Glitch Filtering Capability
- Advanced Low-Power Analog Features
  - 14-Bit 1-MSPS SAR ADC With Differential and Single-Ended Inputs
  - Internal Voltage Reference With 10-ppm/°C Typical Stability
  - Two Analog Comparators
- Encryption and Data Integrity Accelerators
  - 128-, 192-, or 256-Bit AES Encryption and Decryption Accelerator
  - 32-Bit Hardware CRC Engine
- JTAG and Debug Support
  - Support for 4-Pin JTAG and 2-Pin SWD Debug Interfaces
  - Support for Serial Wire Trace
  - Support for Power Debug and Profiling of Applications

An IMPORTANT NOTICE at the end of this data sheet addresses availability, warranty, changes, use in safety-critical applications, intellectual property matters and other important disclaimers. PRODUCTION DATA.

## 1.2 Applications

- Industrial and Automation
  - Home Automation
  - Smoke Detectors
  - Barcode Scanners
  - Access Panels
- Metering
  - Electric Meters
  - Flow Meters
  - Communication Modules
- Health and Fitness
  - Watches
  - Activity Monitors
  - Fitness Accessories
  - Blood Glucose Meters
- Consumer Electronics
  - Mobile Devices
  - Sensor Hubs

## 1.3 Description

The MSP432P401x microcontroller (MCU) family is TI's latest addition to its portfolio of efficient ultra-low-power mixed-signal MCUs. The MSP432P401x MCUs feature the ARM Cortex-M4 processor in a wide configuration of device options including a rich set of analog, timing, and communication peripherals, thereby catering to a large number of application scenarios where both efficient data processing and enhanced low-power operation are paramount.

Overall, the MSP432P401x is an ideal combination of the TI MSP430™ low-power DNA, advance mixed-signal features, and the processing capabilities of the ARM 32-bit Cortex-M4 RISC engine. The devices ship with bundled peripheral driver libraries and are compatible with standard components of the ARM ecosystem.

**Device Information(1)**

| PART NUMBER | PACKAGE | BODY SIZE(2) |
|---|---|---|
| MSP432P401RIPZ<br>MSP432P401MIPZ | LQFP (100) | 14 mm × 14 mm |
| MSP432P401RIZXH<br>MSP432P401MIZXH | NFBGA (80) | 5 mm × 5 mm |
| MSP432P401RIRGC<br>MSP432P401MIRGC | VQFN (64) | 9 mm × 9 mm |

(1) For the most current part, package, and ordering information for all available devices, see the *Package Option Addendum* in Section 9, or see the TI website.
(2) The sizes shown here are approximations. For the package dimensions with tolerances, see the *Mechanical Data* in Section 9.


Copyright © 2015–2016, Texas Instruments Incorporated

## 1.4 Functional Block Diagram

Figure 1-1 shows the functional block diagram of the MSP432P401R and MSP432P401M devices.

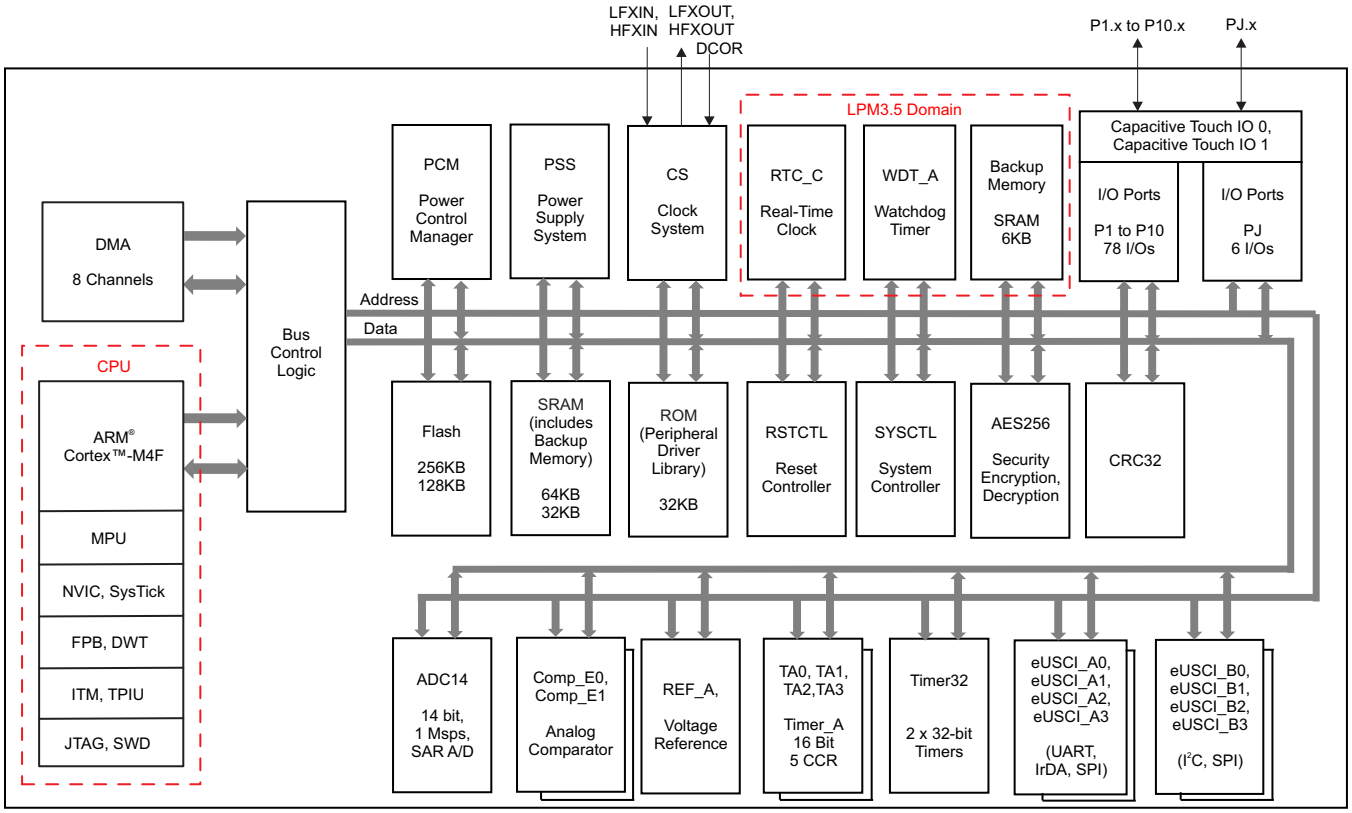


**Figure 1-1. MSP432P401R, MSP432P401M Functional Block Diagram**

The CPU and all of the peripherals in the device interact with each other through a common AHB matrix. In some cases, there are bridges between the AHB ports and the peripherals. These bridges are transparent to the application from a memory map perspective and, therefore, are not shown in the block diagram.

# Table of Contents

**1 Device Overview** ..... **1**
1.1 Features ..... 1
1.2 Applications ..... 2
1.3 Description ..... 2
1.4 Functional Block Diagram ..... 3
**2 Revision History** ..... **5**
**3 Device Comparison** ..... **6**
3.1 Related Products ..... 7
**4 Terminal Configuration and Functions** ..... **8**
4.1 Pin Diagrams ..... 8
4.2 Pin Attributes ..... 11
4.3 Signal Descriptions ..... 17
4.4 Pin Multiplexing ..... 27
4.5 Buffer Types ..... 27
4.6 Connection for Unused Pins ..... 27
**5 Specifications** ..... **28**
5.1 Absolute Maximum Ratings ..... 28
5.2 ESD Ratings ..... 28
5.3 Recommended Operating Conditions ..... 28
5.4 Recommended External Components ..... 29
5.5 Operating Mode $V_{CC}$ Ranges ..... 29
5.6 Operating Mode CPU Frequency Ranges ..... 30
5.7 Operating Mode Peripheral Frequency Ranges ..... 30
5.8 Operating Mode Execution Frequency vs Flash Wait-State Requirements ..... 31
5.9 Current Consumption During Device Reset ..... 31
5.10 Current Consumption in LDO-Based Active Modes – Dhrystone 2.1 Program ..... 31
5.11 Current Consumption in DC-DC-Based Active Modes – Dhrystone 2.1 Program ..... 32
Current Consumption in Low-Frequency Active Modes – Dhrystone 2.1 Program ..... 32
5.12 Typical Characteristics of Active Mode Currents for CoreMark Program ..... 33
5.13 Typical Characteristics of Active Mode Currents for Prime Number Program ..... 34
5.14 Typical Characteristics of Active Mode Currents for Fibonacci Program ..... 35
5.15 Typical Characteristics of Active Mode Currents for While(1) Program ..... 36
5.16 Typical Characteristics of Low-Frequency Active Mode Currents for CoreMark Program ..... 37
5.17 Current Consumption in LDO-Based LPM0 Modes ..... 38
5.18 Current Consumption in DC-DC-Based LPM0 Modes ..... 38
5.19 Current Consumption in Low-Frequency LPM0 Modes ..... 38
5.20 Current Consumption in LPM3, LPM4 Modes ..... 39
5.21 Current Consumption in LPM3.5, LPM4.5 Modes ..... 39
5.22 Current Consumption of Digital Peripherals ..... 40
5.23 Thermal Resistance Characteristics ..... 40
5.24 Timing and Switching Characteristics ..... 41
**6 Detailed Description** ..... **90**
6.1 Overview ..... 90
6.2 Processor and Execution Features ..... 90
6.3 Memory Map ..... 91
6.4 Memories on the MSP432P401x ..... 111
6.5 DMA ..... 114
6.6 Memory Map Access Details ..... 115
6.7 Interrupts ..... 117
6.8 System Control ..... 119
6.9 Peripherals ..... 125
6.10 Code Development and Debug ..... 135
6.11 Performance Benchmarks ..... 137
6.12 Input/Output Diagrams ..... 139
6.13 Device Descriptors (TLV) ..... 177
6.14 Identification ..... 180
**7 Applications, Implementation, and Layout** ..... **182**
7.1 Device Connection and Layout Fundamentals ..... 182
7.2 Peripheral and Interface-Specific Design Information ..... 183
**8 Device and Documentation Support** ..... **185**
8.1 Getting Started and Next Steps ..... 185
8.2 Device and Development Tool Nomenclature ..... 185
8.3 Tools and Software ..... 187
8.4 Documentation Support ..... 189
8.5 Related Links ..... 190
8.6 Community Resources ..... 190
8.7 Trademarks ..... 190
8.8 Electrostatic Discharge Caution ..... 191
8.9 Export Control Notice ..... 191
8.10 Glossary ..... 191
**9 Mechanical, Packaging, and Orderable Information** ..... **192**


Copyright © 2015–2016, Texas Instruments Incorporated

## 2 Revision History

NOTE: Page numbers for previous revisions may differ from page numbers in the current version.

| Changes from February 17, 2016 to June 23, 2016 | Page |
|---|---|
| • Changed ULPBench score | 1 |
| • Changed power consumption values for LPMs in Section 1.1, *Features* | 1 |
| • Added Section 3.1, *Related Products* | 7 |
| • Added Section 4.2, *Pin Attributes* | 11 |
| • Changed layout of Table 4-2, *Signal Descriptions* | 17 |
| • Added Section 4.4, *Pin Multiplexing* | 27 |
| • Added Section 4.5, *Buffer Types* | 27 |
| • Added Section 4.6, *Connection for Unused Pins* | 27 |
| • Updated all electrical and timing specifications and graphs with production data | 28 |
| • Added Section 5.24.5.1, *Typical Characteristics, Normal-Drive I/O Outputs at 3.0 V and 2.2 V* | 61 |
| • Added Section 5.24.5.2, *Typical Characteristics, High-Drive I/O Outputs at 3.0 V and 2.2 V* | 62 |
| • Added Section 5.24.5.3, *Typical Characteristics, Pin-Oscillator Frequency* | 63 |
| • Added tables that list peripheral registers (Table 6-2 through Table 6-31) | 95 |
| • Added tables that list RSTCTL and SYSCTL registers (Table 6-33 and Table 6-34) | 110 |
| • Removed "Flash Size Register" section | 112 |
| • Updated description in Section 6.4.1.2, *Flash Information Memory* | 112 |
| • Removed "SRAM Status and Configuration Registers" section | 114 |
| • Removed DMA block diagram | 115 |
| • Added "The DMA transfers are initiated upon rising edge of the selected DMA source" to the first paragraph in Section 6.5.1, *DMA Source Mapping* | 115 |
| • Removed "NMI Control and Status Register" section | 117 |
| • Removed "Reboot Control Register" section | 120 |
| • Removed "Supply Supervisor for Low Side (SVSL)" section | 123 |
| • Removed "SYSCTL Registers" table | 125 |
| • Removed "Digital I/O Glitch Filter Control Register" section | 125 |
| • Removed "Watchdog Reset Control Register" section | 133 |
| • Replaced "Peripheral Halt Control Register" section with Section 6.10.2, *Peripheral Halt Control* | 136 |
| • Changed all instances of "bootstrap loader" to "bootloader" throughout document | 136 |
| • Added Section 6.14, *Identification* | 180 |
| • Changed the organization of Section 8, *Device and Documentation Support*, and updated with additional information | 185 |

Copyright © 2015–2016, Texas Instruments Incorporated

# 3 Device Comparison

Table 3-1 summarizes the features of the MSP432P401x microcontrollers.

**Table 3-1. Device Comparison(1)**

| DEVICE | FLASH (KB) | SRAM (KB) | ADC14 (Channels) | COMP_E0 (Channels) | COMP_E1 (Channels) | Timer_A(2) | eUSCI | | 20-mA DRIVE I/O | TOTAL I/Os | PACKAGE |
|---|---|---|---|---|---|---|---|---|---|---|---|
| | | | | | | | CHANNEL A: UART, IrDA, SPI | CHANNEL B: SPI, $I^2C$ | | | |
| MSP432P401RIPZ | 256 | 64 | 24 ext, 2 int | 8 | 8 | 5, 5, 5, 5 | 4 | 4 | 4 | 84 | 100 PZ |
| MSP432P401MIPZ | 128 | 32 | 24 ext, 2 int | 8 | 8 | 5, 5, 5, 5 | 4 | 4 | 4 | 84 | 100 PZ |
| MSP432P401RIZXH | 256 | 64 | 16 ext, 2 int | 6 | 8 | 5, 5, 5 | 3 | 4 | 4 | 64 | 80 ZXH |
| MSP432P401MIZXH | 128 | 32 | 16 ext, 2 int | 6 | 8 | 5, 5, 5 | 3 | 4 | 4 | 64 | 80 ZXH |
| MSP432P401RIRGC | 256 | 64 | 12 ext, 2 int | 2 | 4 | 5, 5, 5 | 3 | 3 | 4 | 48 | 64 RGC |
| MSP432P401MIRGC | 128 | 32 | 12 ext, 2 int | 2 | 4 | 5, 5, 5 | 3 | 3 | 4 | 48 | 64 RGC |

(1) For the most current part, package, and ordering information for all available devices, see the *Package Option Addendum* in Section 9, or see the TI website at www.ti.com.
(2) Each number in the sequence represents an instantiation of Timer_A with its associated number of capture/compare registers and PWM output generators available. For example, a number sequence of 3, 5 would represent two instantiations of Timer_A, the first instantiation having 3 and the second instantiation having 5 capture/compare registers and PWM output generators, respectively.


Copyright © 2015–2016, Texas Instruments Incorporated

## 3.1 Related Products

For information about other devices in this family of products or related products, see the following links.

**Products for MSP 16-Bit and 32-Bit MCUs** Low-power mixed-signal processors with smart analog and digital peripherals for a wide range of industrial and consumer applications.

**Products for Low Power + Performance MCUs** MSP low power + performance microcontrollers from TI provide designers with increased processing capability, smart analog, advanced security, and display and communication peripherals while using less watts than ever before for the development of “always on” embedded applications.

**Products for MSP432P4x MCUs** MSP432P4x microcontrollers are the ideal combination of TI's MSP430 low-power DNA, advanced mixed-signal features, and the high-performance processing capabilities of the ARM 32-bit Cortex M4F engine. MSP432P4x MCUs cater to a large number of embedded applications where both efficient data processing and enhanced low-power operation are paramount.

**Companion Products for MSP432P401R** Review products that are frequently purchased or used in conjunction with this product.

**Reference Designs for MSP432P401R** TI Designs Reference Design Library is a robust reference design library that spans analog, embedded processor, and connectivity. Created by TI experts to help you jump start your system design, all TI Designs include schematic or block diagrams, BOMs, and design files to speed your time to market. Search and download designs at ti.com/tidesigns.

# 4 Terminal Configuration and Functions

## 4.1 Pin Diagrams

Figure 4-1 shows the pinout of the 100-pin PZ package.

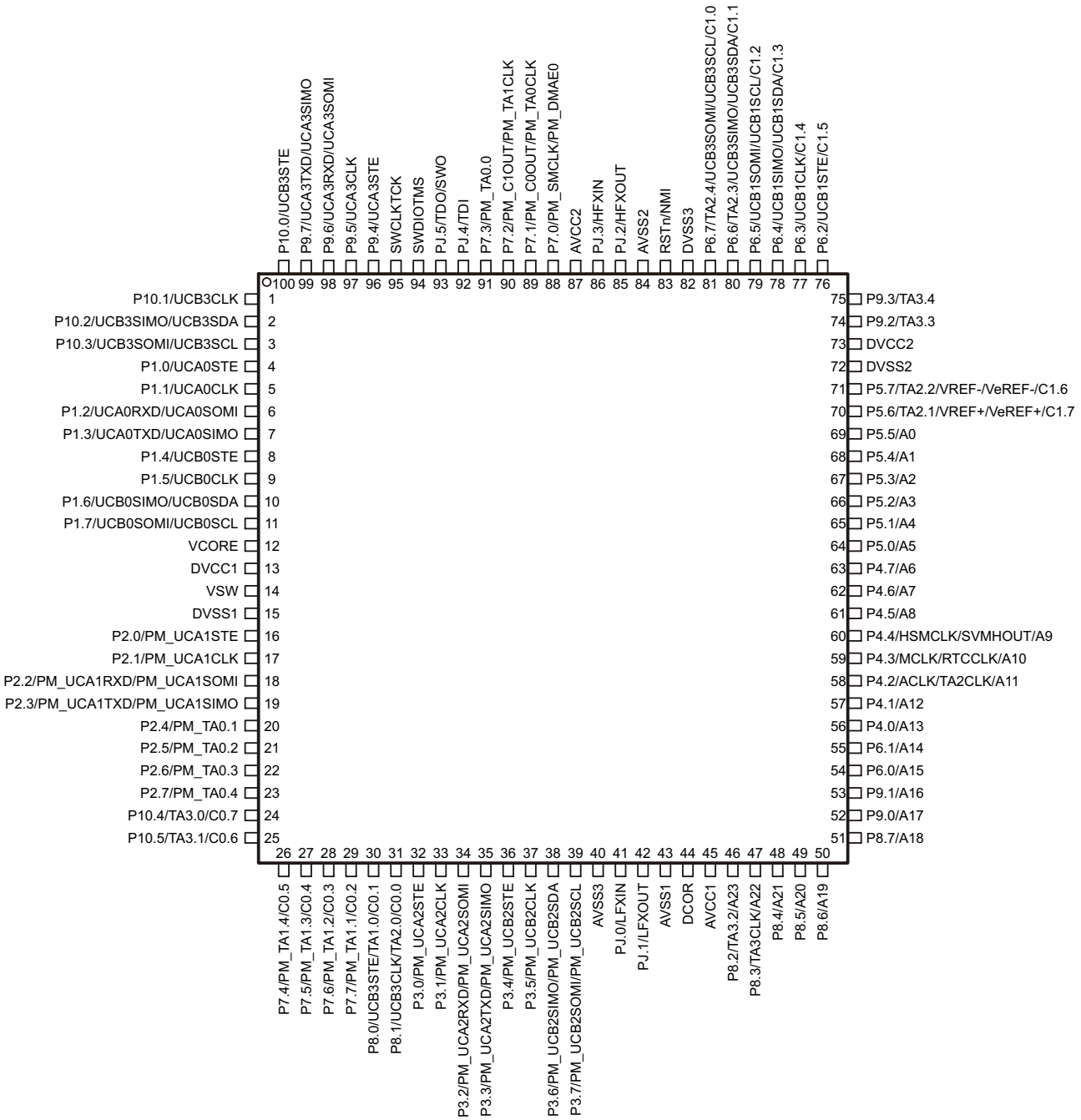


A. The secondary digital functions on Ports P2, P3, and P7 are fully mappable. This pinout shows only the default mapping. See Section 6.9.2 for details.

B. A glitch filter is implemented on these digital I/Os: P1.0, P1.4, P1.5, P3.0, P3.4, P3.5, P6.6, P6.7.

C. UART BSL pins: P1.2 - BSLRXD, P1.3 - BSLTXD

D. SPI BSL pins: P1.4 - BSLSTE, P1.5 - BSLCLK, P1.6 - BSLSIMO, P1.7 - BSLSOMI

E. $I^2C$ BSL pins: P3.6 - BSLSDA, P3.7 - BSLSCL

**Figure 4-1. 100-Pin PZ Package (Top View)**


Copyright © 2015–2016, Texas Instruments Incorporated

Figure 4-2 shows the pinout of the 80-pin ZXH package.

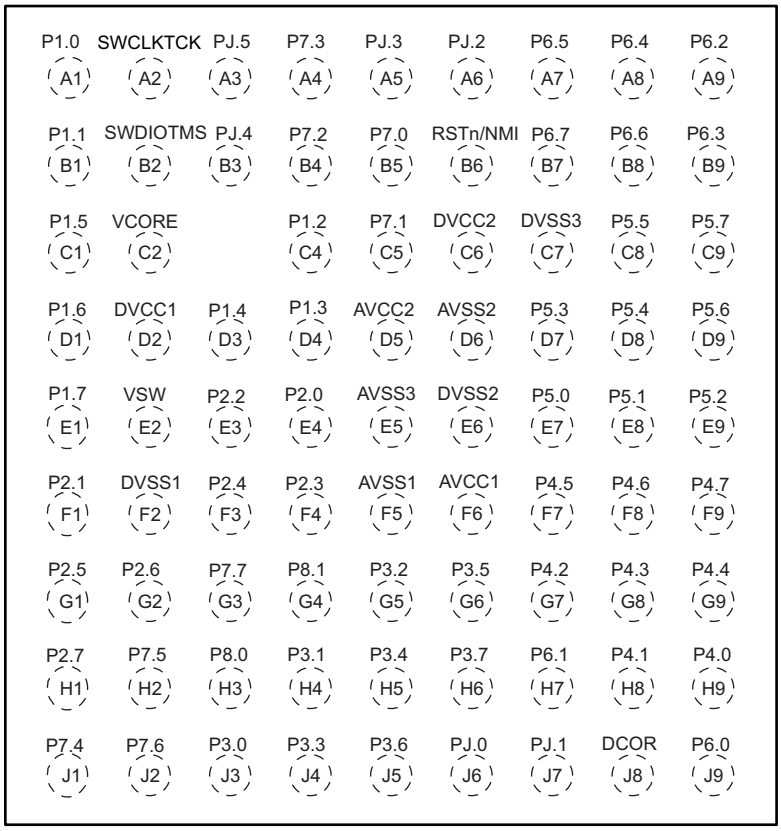


A. A glitch filter is implemented on these digital I/Os: P1.0, P1.4, P1.5, P3.0, P3.4, P3.5, P6.6, P6.7.
B. UART BSL pins: P1.2 - BSLRXD, P1.3 - BSLTXD
C. SPI BSL pins: P1.4 - BSLSTE, P1.5 - BSLCLK, P1.6 - BSLSIMO, P1.7 - BSLSOMI
D. $I^2C$ BSL pins: P3.6 - BSLSDA, P3.7 - BSLSCL

**Figure 4-2. 80-Pin ZXH Package (Top View)**

Figure 4-3 shows the pinout of the 64-pin RGC package.

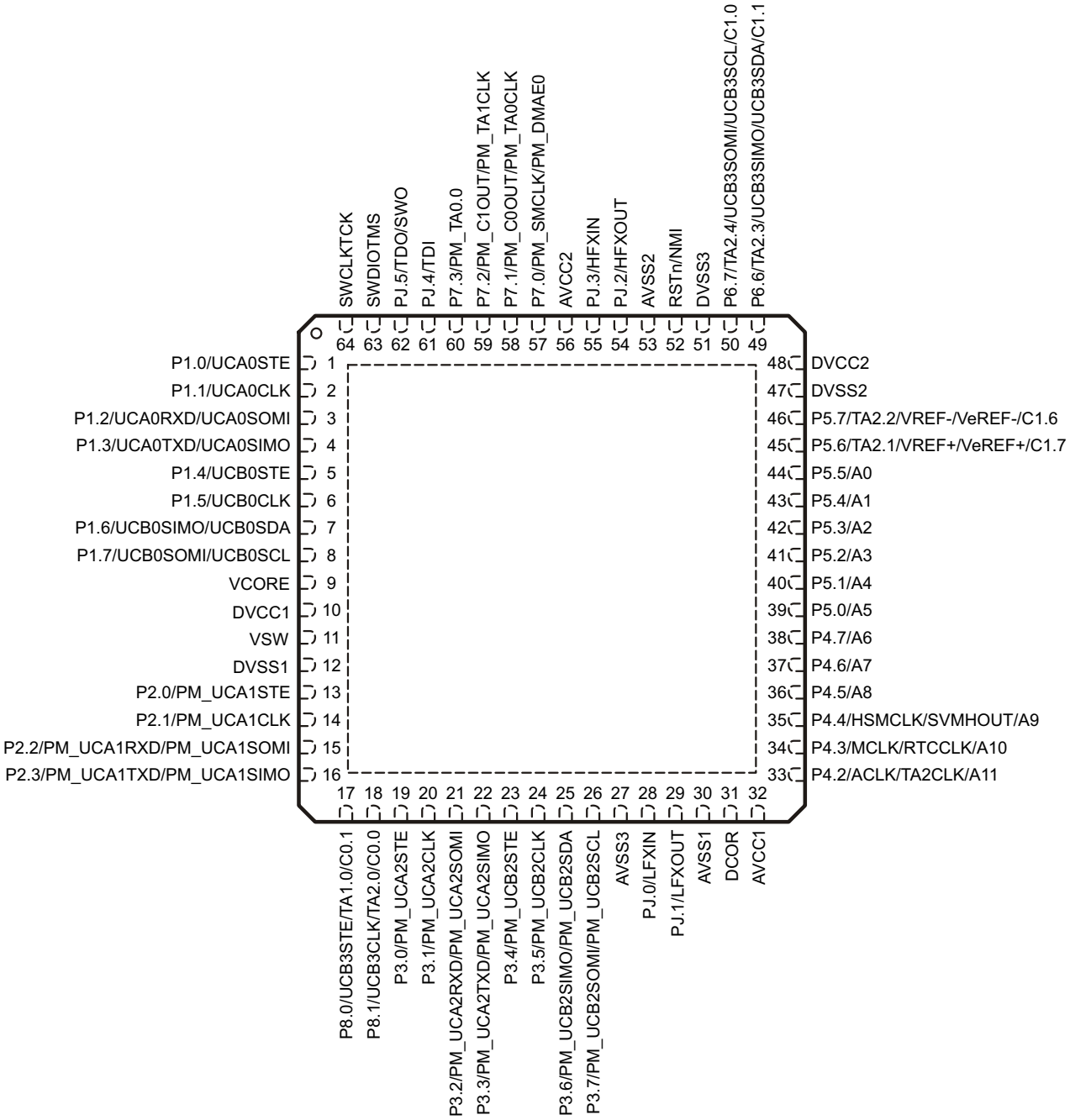


A. The secondary digital functions on Ports P2, P3, and P7 are fully mappable. This pinout shows only the default mapping. See Section 6.9.2 for details.
B. A glitch filter is implemented on these digital I/Os: P1.0, P1.4, P1.5, P3.0, P3.4, P3.5, P6.6, P6.7.
C. TI recommends connecting the thermal pad on the QFN package to DVSS.
D. UART BSL pins: P1.2 - BSLRXD, P1.3 - BSLTXD
E. SPI BSL pins: P1.4 - BSLSTE, P1.5 - BSLCLK, P1.6 - BSLSIMO, P1.7 - BSLSOMI
F. $I^2C$ BSL pins: P3.6 - BSLSDA, P3.7 - BSLSCL

**Figure 4-3. 64-Pin RGC Package (Top View)**


Copyright © 2015–2016, Texas Instruments Incorporated

## 4.2 Pin Attributes

Table 4-1 describes the attributes of the pins.

**Table 4-1. Pin Attributes**

| PIN NO.(1) | | | SIGNAL NAME(2) (3) | SIGNAL TYPE(4) | BUFFER TYPE(5) | POWER SOURCE(6) | RESET STATE AFTER POR(7) |
|---|---|---|---|---|---|---|---|
| PZ | ZXH | RGC | | | | | |
| 1 | N/A | N/A | P10.1 (RD) | I/O | LVCMOS | DVCC | OFF |
| | | | UCB3CLK | I/O | LVCMOS | DVCC | N/A |
| 2 | N/A | N/A | P10.2 (RD) | I/O | LVCMOS | DVCC | OFF |
| | | | UCB3SIMO | I/O | LVCMOS | DVCC | N/A |
| | | | UCB3SDA | I/O | LVCMOS | DVCC | N/A |
| 3 | N/A | N/A | P10.3 (RD) | I/O | LVCMOS | DVCC | OFF |
| | | | UCB3SOMI | I/O | LVCMOS | DVCC | N/A |
| | | | UCB3SCL | I/O | LVCMOS | DVCC | N/A |
| 4 | A1 | 1 | P1.0 (RD) | I/O | LVCMOS | DVCC | OFF |
| | | | UCA0STE | I/O | LVCMOS | DVCC | N/A |
| 5 | B1 | 2 | P1.1 (RD) | I/O | LVCMOS | DVCC | OFF |
| | | | UCA0CLK | I/O | LVCMOS | DVCC | N/A |
| 6 | C4 | 3 | P1.2 (RD) | I/O | LVCMOS | DVCC | OFF |
| | | | UCA0RXD | I | LVCMOS | DVCC | N/A |
| | | | UCA0SOMI | I/O | LVCMOS | DVCC | N/A |
| 7 | D4 | 4 | P1.3 (RD) | I/O | LVCMOS | DVCC | OFF |
| | | | UCA0TXD | O | LVCMOS | DVCC | N/A |
| | | | UCA0SIMO | I/O | LVCMOS | DVCC | N/A |
| 8 | D3 | 5 | P1.4 (RD) | I/O | LVCMOS | DVCC | OFF |
| | | | UCB0STE | I/O | LVCMOS | DVCC | N/A |
| 9 | C1 | 6 | P1.5 (RD) | I/O | LVCMOS | DVCC | OFF |
| | | | UCB0CLK | I/O | LVCMOS | DVCC | N/A |
| 10 | D1 | 7 | P1.6 (RD) | I/O | LVCMOS | DVCC | OFF |
| | | | UCB0SIMO | I/O | LVCMOS | DVCC | N/A |
| | | | UCB0SDA | I/O | LVCMOS | DVCC | N/A |
| 11 | E1 | 8 | P1.7 (RD) | I/O | LVCMOS | DVCC | OFF |
| | | | UCB0SOMI | I/O | LVCMOS | DVCC | N/A |
| | | | UCB0SCL | I/O | LVCMOS | DVCC | N/A |
| 12 | C2 | 9 | VCORE | – | Power | DVCC | N/A |
| 13 | D2 | 10 | DVCC1 | – | Power | N/A | N/A |
| 14 | E2 | 11 | VSW | – | Power | N/A | N/A |
| 15 | F2 | 12 | DVSS1 | – | Power | N/A | N/A |
| 16 | E4 | 13 | P2.0 (RD) | I/O | LVCMOS | DVCC | OFF |
| | | | PM_UCA1STE | I/O | LVCMOS | DVCC | N/A |

(1) N/A = not available on this package
(2) (RD) indicates the reset default signal name for that pin.
(3) To determine the pin mux encodings for each pin, refer to Section 6.12, *Input/Output Diagrams*.
(4) Signal Types: I = Input, O = Output, I/O = Input or Output, P = power
(5) Buffer Types: see Table 4-3 for details
(6) The power source shown in this table is the I/O power source, which may differ from the module power source.
(7) Reset States:
OFF = High-impedance with Schmitt trigger and pullup or pulldown (if available) disabled
PD = High-impedance input with pulldown enabled
PU = High-impedance input with pullup enabled
N/A = Not applicable

Copyright © 2015–2016, Texas Instruments Incorporated

**Table 4-1. Pin Attributes (continued)**

| PIN NO.(1) | | | SIGNAL NAME(2) (3) | SIGNAL TYPE(4) | BUFFER TYPE(5) | POWER SOURCE(6) | RESET STATE AFTER POR(7) |
|---|---|---|---|---|---|---|---|
| PZ | ZXH | RGC | | | | | |
| 17 | F1 | 14 | P2.1 (RD) | I/O | LVCMOS | DVCC | OFF |
| | | | PM_UCA1CLK | I/O | LVCMOS | DVCC | N/A |
| 18 | E3 | 15 | P2.2 (RD) | I/O | LVCMOS | DVCC | OFF |
| | | | PM_UCA1RXD | I | LVCMOS | DVCC | N/A |
| | | | PM_UCA1SOMI | I/O | LVCMOS | DVCC | N/A |
| 19 | F4 | 16 | P2.3 (RD) | I/O | LVCMOS | DVCC | OFF |
| | | | PM_UCA1TXD | O | LVCMOS | DVCC | N/A |
| | | | PM_UCA1SIMO | I/O | LVCMOS | DVCC | N/A |
| 20 | F3 | N/A | P2.4 (RD) | I/O | LVCMOS | DVCC | OFF |
| | | | PM_TA0.1 | I/O | LVCMOS | DVCC | N/A |
| 21 | G1 | N/A | P2.5 (RD) | I/O | LVCMOS | DVCC | OFF |
| | | | PM_TA0.2 | I/O | LVCMOS | DVCC | N/A |
| 22 | G2 | N/A | P2.6 (RD) | I/O | LVCMOS | DVCC | OFF |
| | | | PM_TA0.3 | I/O | LVCMOS | DVCC | N/A |
| 23 | H1 | N/A | P2.7 (RD) | I/O | LVCMOS | DVCC | OFF |
| | | | PM_TA0.4 | I/O | LVCMOS | DVCC | N/A |
| 24 | N/A | N/A | P10.4 (RD) | I/O | LVCMOS | DVCC | OFF |
| | | | TA3.0 | I/O | LVCMOS | DVCC | N/A |
| | | | C0.7 | I/O | Analog | DVCC | N/A |
| 25 | N/A | N/A | P10.5 (RD) | I/O | LVCMOS | DVCC | OFF |
| | | | TA3.1 | I/O | LVCMOS | DVCC | N/A |
| | | | C0.6 | I | Analog | DVCC | N/A |
| 26 | J1 | N/A | P7.4 (RD) | I/O | LVCMOS | DVCC | OFF |
| | | | PM_TA1.4 | I/O | LVCMOS | DVCC | N/A |
| | | | C0.5 | I | Analog | DVCC | N/A |
| 27 | H2 | N/A | P7.5 (RD) | I/O | LVCMOS | DVCC | OFF |
| | | | PM_TA1.3 | I/O | LVCMOS | DVCC | N/A |
| | | | C0.4 | I | Analog | DVCC | N/A |
| 28 | J2 | N/A | P7.6 (RD) | I/O | LVCMOS | DVCC | OFF |
| | | | PM_TA1.2 | I/O | LVCMOS | DVCC | N/A |
| | | | C0.3 | I | Analog | DVCC | N/A |
| 29 | G3 | N/A | P7.7 (RD) | I/O | LVCMOS | DVCC | OFF |
| | | | PM_TA1.1 | I/O | LVCMOS | DVCC | N/A |
| | | | C0.2 | I | Analog | DVCC | N/A |
| 30 | H3 | 17 | P8.0 (RD) | I/O | LVCMOS | DVCC | OFF |
| | | | UCB3STE | I/O | LVCMOS | DVCC | N/A |
| | | | TA1.0 | I/O | LVCMOS | DVCC | N/A |
| | | | C0.1 | I | Analog | DVCC | N/A |
| 31 | G4 | 18 | P8.1 (RD) | I/O | LVCMOS | DVCC | OFF |
| | | | UCB3CLK | I/O | LVCMOS | DVCC | N/A |
| | | | TA2.0 | I/O | LVCMOS | DVCC | N/A |
| | | | C0.0 | I | Analog | DVCC | N/A |
| 32 | J3 | 19 | P3.0 (RD) | I/O | LVCMOS | DVCC | OFF |
| | | | PM_UCA2STE | I/O | LVCMOS | DVCC | N/A |
| 33 | H4 | 20 | P3.1 (RD) | I/O | LVCMOS | DVCC | OFF |
| | | | PM_UCA2CLK | I/O | LVCMOS | DVCC | N/A |


Copyright © 2015–2016, Texas Instruments Incorporated

**Table 4-1. Pin Attributes (continued)**

| PIN NO.(1) | | | SIGNAL NAME(2) (3) | SIGNAL TYPE(4) | BUFFER TYPE(5) | POWER SOURCE(6) | RESET STATE AFTER POR(7) |
|---|---|---|---|---|---|---|---|
| PZ | ZXH | RGC | | | | | |
| 34 | G5 | 21 | P3.2 (RD) | I/O | LVCMOS | DVCC | OFF |
| | | | PM_UCA2RXD | I | LVCMOS | DVCC | N/A |
| | | | PM_UCA2SOMI | I/O | LVCMOS | DVCC | N/A |
| 35 | J4 | 22 | P3.3 (RD) | I/O | LVCMOS | DVCC | OFF |
| | | | PM_UCA2TXD | O | LVCMOS | DVCC | N/A |
| | | | PM_UCA2SIMO | I/O | LVCMOS | DVCC | N/A |
| 36 | H5 | 23 | P3.4 (RD) | I/O | LVCMOS | DVCC | OFF |
| | | | PM_UCB2STE | I/O | LVCMOS | DVCC | N/A |
| 37 | G6 | 24 | P3.5 (RD) | I/O | LVCMOS | DVCC | OFF |
| | | | PM_UCB2CLK | I/O | LVCMOS | DVCC | N/A |
| 38 | J5 | 25 | P3.6 (RD) | I/O | LVCMOS | DVCC | OFF |
| | | | PM_UCB2SIMO | I/O | LVCMOS | DVCC | N/A |
| | | | PM_UCB2SDA | I/O | LVCMOS | DVCC | N/A |
| 39 | H6 | 26 | P3.7 (RD) | I/O | LVCMOS | DVCC | OFF |
| | | | PM_UCB2SOMI | I/O | LVCMOS | DVCC | N/A |
| | | | PM_UCB2SCL | I | LVCMOS | DVCC | N/A |
| 40 | E5 | 27 | AVSS3 | – | Power | N/A | N/A |
| 41 | J6 | 28 | PJ.0 (RD) | I/O | LVCMOS | DVCC | OFF |
| | | | LFXIN | I | Analog | DVCC | N/A |
| 42 | J7 | 29 | PJ.1 (RD) | I/O | LVCMOS | DVCC | OFF |
| | | | LFXOUT | O | Analog | DVCC | N/A |
| 43 | F5 | 30 | AVSS1 | – | Power | N/A | N/A |
| 44 | J8 | 31 | DCOR | – | Analog | N/A | N/A |
| 45 | F6 | 32 | AVCC1 | – | Power | N/A | N/A |
| 46 | N/A | N/A | P8.2 (RD) | I/O | LVCMOS | DVCC | OFF |
| | | | TA3.2 | I/O | LVCMOS | DVCC | N/A |
| | | | A23 | I | Analog | DVCC | N/A |
| 47 | N/A | N/A | P8.3 (RD) | I/O | LVCMOS | DVCC | OFF |
| | | | TA3CLK | I | LVCMOS | DVCC | N/A |
| | | | A22 | I | Analog | DVCC | N/A |
| 48 | N/A | N/A | P8.4 (RD) | I/O | LVCMOS | DVCC | OFF |
| | | | A21 | I | Analog | DVCC | N/A |
| 49 | N/A | N/A | P8.5 (RD) | I/O | LVCMOS | DVCC | OFF |
| | | | A20 | I | Analog | DVCC | N/A |
| 50 | N/A | N/A | P8.6 (RD) | I/O | LVCMOS | DVCC | OFF |
| | | | A19 | I | Analog | DVCC | N/A |
| 51 | N/A | N/A | P8.7 (RD) | I/O | LVCMOS | DVCC | OFF |
| | | | A18 | I | Analog | DVCC | N/A |
| 52 | N/A | N/A | P9.0 (RD) | I/O | LVCMOS | DVCC | OFF |
| | | | A17 | I | Analog | DVCC | N/A |
| 53 | N/A | N/A | P9.1 (RD) | I/O | LVCMOS | DVCC | OFF |
| | | | A16 | I | Analog | DVCC | N/A |
| 54 | J9 | N/A | P6.0 (RD) | I/O | LVCMOS | DVCC | OFF |
| | | | A15 | I | Analog | DVCC | N/A |
| 55 | H7 | N/A | P6.1 (RD) | I/O | LVCMOS | DVCC | OFF |
| | | | A14 | I | Analog | DVCC | N/A |

Copyright © 2015–2016, Texas Instruments Incorporated

**Table 4-1. Pin Attributes (continued)**

| PIN NO.(1) | | | SIGNAL NAME(2) (3) | SIGNAL TYPE(4) | BUFFER TYPE(5) | POWER SOURCE(6) | RESET STATE AFTER POR(7) |
|---|---|---|---|---|---|---|---|
| PZ | ZXH | RGC | | | | | |
| 56 | H9 | N/A | P4.0 (RD) | I/O | LVCMOS | DVCC | OFF |
| | | | A13 | I | Analog | DVCC | N/A |
| 57 | H8 | N/A | P4.1 (RD) | I/O | LVCMOS | DVCC | OFF |
| | | | A12 | I | Analog | DVCC | N/A |
| 58 | G7 | 33 | P4.2 (RD) | I/O | LVCMOS | DVCC | OFF |
| | | | ACLK | O | LVCMOS | DVCC | N/A |
| | | | TA2CLK | I | LVCMOS | DVCC | N/A |
| | | | A11 | I | Analog | DVCC | N/A |
| 59 | G8 | 34 | P4.3 (RD) | I/O | LVCMOS | DVCC | OFF |
| | | | MCLK | O | LVCMOS | DVCC | N/A |
| | | | RTCCLK | O | LVCMOS | DVCC | N/A |
| | | | A10 | I | Analog | DVCC | N/A |
| 60 | G9 | 35 | P4.4 (RD) | I/O | LVCMOS | DVCC | OFF |
| | | | HSMCLK | O | LVCMOS | DVCC | N/A |
| | | | SVMHOUT | O | LVCMOS | DVCC | N/A |
| | | | A9 | I | Analog | DVCC | N/A |
| 61 | F7 | 36 | P4.5 (RD) | I/O | LVCMOS | DVCC | OFF |
| | | | A8 | I | Analog | DVCC | N/A |
| 62 | F8 | 37 | P4.6 (RD) | I/O | LVCMOS | DVCC | OFF |
| | | | A7 | I | Analog | DVCC | N/A |
| 63 | F9 | 38 | P4.7 (RD) | I/O | LVCMOS | DVCC | OFF |
| | | | A6 | I | Analog | DVCC | N/A |
| 64 | E7 | 39 | P5.0 (RD) | I/O | LVCMOS | DVCC | OFF |
| | | | A5 | I | Analog | DVCC | N/A |
| 65 | E8 | 40 | P5.1 (RD) | I/O | LVCMOS | DVCC | OFF |
| | | | A4 | I | Analog | DVCC | N/A |
| 66 | E9 | 41 | P5.2 (RD) | I/O | LVCMOS | DVCC | OFF |
| | | | A3 | I | Analog | DVCC | N/A |
| 67 | D7 | 42 | P5.3 (RD) | I/O | LVCMOS | DVCC | OFF |
| | | | A2 | I | Analog | DVCC | N/A |
| 68 | D8 | 43 | P5.4 (RD) | I/O | LVCMOS | DVCC | OFF |
| | | | A1 | I | Analog | DVCC | N/A |
| 69 | C8 | 44 | P5.5 (RD) | I/O | LVCMOS | DVCC | OFF |
| | | | A0 | I | Analog | DVCC | N/A |
| 70 | D9 | 45 | P5.6 (RD) | I/O | LVCMOS | DVCC | OFF |
| | | | TA2.1 | I/O | LVCMOS | DVCC | N/A |
| | | | VREF+ | O | Analog | DVCC | N/A |
| | | | VeREF+ | I | Analog | DVCC | N/A |
| 70 | D9 | 45 | C1.7 | I | Analog | DVCC | N/A |
| 71 | C9 | 46 | P5.7 (RD) | I/O | LVCMOS | DVCC | OFF |
| | | | TA2.2 | I/O | LVCMOS | DVCC | N/A |
| | | | VREF- | O | Analog | DVCC | N/A |
| | | | VeREF- | I | Analog | DVCC | N/A |
| | | | C1.6 | I | Analog | DVCC | N/A |
| 72 | E6 | 47 | DVSS2 | – | Power | N/A | N/A |
| 73 | C6 | 48 | DVCC2 | – | Power | N/A | N/A |


Copyright © 2015–2016, Texas Instruments Incorporated

**Table 4-1. Pin Attributes (continued)**

| PIN NO.(1) | | | SIGNAL NAME(2) (3) | SIGNAL TYPE(4) | BUFFER TYPE(5) | POWER SOURCE(6) | RESET STATE AFTER POR(7) |
|---|---|---|---|---|---|---|---|
| PZ | ZXH | RGC | | | | | |
| 74 | N/A | N/A | P9.2 (RD) | I/O | LVCMOS | DVCC | OFF |
| | | | TA3.3 | I/O | LVCMOS | DVCC | N/A |
| 75 | N/A | N/A | P9.3 (RD) | I/O | LVCMOS | DVCC | OFF |
| | | | TA3.4 | I/O | LVCMOS | DVCC | N/A |
| 76 | A9 | N/A | P6.2 (RD) | I/O | LVCMOS | DVCC | OFF |
| | | | UCB1STE | I/O | LVCMOS | DVCC | N/A |
| | | | C1.5 | I | Analog | DVCC | N/A |
| 77 | B9 | N/A | P6.3 (RD) | I/O | LVCMOS | DVCC | OFF |
| | | | UCB1CLK | I/O | LVCMOS | DVCC | N/A |
| | | | C1.4 | I | Analog | DVCC | N/A |
| 78 | A8 | N/A | P6.4 (RD) | I/O | LVCMOS | DVCC | OFF |
| | | | UCB1SIMO | I/O | LVCMOS | DVCC | N/A |
| | | | UCB1SDA | I/O | LVCMOS | DVCC | N/A |
| | | | C1.3 | I | Analog | DVCC | N/A |
| 79 | A7 | N/A | P6.5 (RD) | I/O | LVCMOS | DVCC | OFF |
| | | | UCB1SOMI | I/O | LVCMOS | DVCC | N/A |
| | | | UCB1SCL | I/O | LVCMOS | DVCC | N/A |
| | | | C1.2 | I | Analog | DVCC | N/A |
| 80 | B8 | 49 | P6.6 (RD) | I/O | LVCMOS | DVCC | OFF |
| | | | TA2.3 | I/O | LVCMOS | DVCC | N/A |
| | | | UCB3SIMO | I/O | LVCMOS | DVCC | N/A |
| | | | UCB3SDA | I/O | LVCMOS | DVCC | N/A |
| | | | C1.1 | I | Analog | DVCC | N/A |
| 81 | B7 | 50 | P6.7 (RD) | I/O | LVCMOS | DVCC | OFF |
| | | | TA2.4 | I/O | LVCMOS | DVCC | N/A |
| | | | UCB3SOMI | I/O | LVCMOS | DVCC | N/A |
| | | | UCB3SCL | I/O | LVCMOS | DVCC | N/A |
| | | | C1.0 | I | Analog | DVCC | N/A |
| 82 | C7 | 51 | DVSS3 | – | Power | N/A | N/A |
| 83 | B6 | 52 | RSTn (RD) | I | LVCMOS | DVCC | PU |
| | | | NMI | I | LVCMOS | DVCC | N/A |
| 84 | D6 | 53 | AVSS2 | – | Power | N/A | N/A |
| 85 | A6 | 54 | PJ.2 (RD) | I/O | LVCMOS | DVCC | OFF |
| | | | HFXOUT | O | Analog | DVCC | N/A |
| 86 | A5 | 55 | PJ.3 (RD) | I/O | LVCMOS | DVCC | OFF |
| | | | HFXIN | I | Analog | DVCC | N/A |
| 87 | D5 | 56 | AVCC2 | – | Power | N/A | N/A |
| 88 | B5 | 57 | P7.0 (RD) | I/O | LVCMOS | DVCC | OFF |
| | | | PM_SMCLK | O | LVCMOS | DVCC | N/A |
| | | | PM_DMAE0 | I | LVCMOS | DVCC | N/A |
| 89 | C5 | 58 | P7.1 (RD) | I/O | LVCMOS | DVCC | OFF |
| | | | PM_C0OUT | O | LVCMOS | DVCC | N/A |
| | | | PM_TA0CLK | I | LVCMOS | DVCC | N/A |
| 90 | B4 | 59 | P7.2 (RD) | I/O | LVCMOS | DVCC | OFF |
| | | | PM_C1OUT | O | LVCMOS | DVCC | N/A |
| | | | PM_TA1CLK | I | LVCMOS | DVCC | N/A |

Copyright © 2015–2016, Texas Instruments Incorporated

**Table 4-1. Pin Attributes (continued)**

| PIN NO.(1) | | | SIGNAL NAME(2) (3) | SIGNAL TYPE(4) | BUFFER TYPE(5) | POWER SOURCE(6) | RESET STATE AFTER POR(7) |
|---|---|---|---|---|---|---|---|
| PZ | ZXH | RGC | | | | | |
| 91 | A4 | 60 | P7.3 (RD) | I/O | LVCMOS | DVCC | OFF |
| | | | PM_TA0.0 | I/O | LVCMOS | DVCC | N/A |
| 92 | B3 | 61 | PJ.4 | I/O | LVCMOS | DVCC | N/A |
| | | | TDI (RD) | I | LVCMOS | DVCC | PU |
| 93 | A3 | 62 | PJ.5 | I/O | LVCMOS | DVCC | N/A |
| | | | TDO (RD) | O | LVCMOS | DVCC | N/A |
| | | | SWO | O | LVCMOS | DVCC | N/A |
| 94 | B2 | 63 | SWDIOTMS | I/O | LVCMOS | DVCC | PU |
| 95 | A2 | 64 | SWCLKTCK | I | LVCMOS | DVCC | PD |
| 96 | N/A | N/A | P9.4 (RD) | I/O | LVCMOS | DVCC | OFF |
| | | | UCA3STE | I/O | LVCMOS | DVCC | N/A |
| 97 | N/A | N/A | P9.5 (RD) | I/O | LVCMOS | DVCC | OFF |
| | | | UCA3CLK | I/O | LVCMOS | DVCC | N/A |
| 98 | N/A | N/A | P9.6 (RD) | I/O | LVCMOS | DVCC | OFF |
| | | | UCA3RXD | I | LVCMOS | DVCC | N/A |
| | | | UCA3SOMI | I/O | LVCMOS | DVCC | N/A |
| 99 | N/A | N/A | P9.7 (RD) | I/O | LVCMOS | DVCC | OFF |
| | | | UCA3TXD | O | LVCMOS | DVCC | N/A |
| | | | UCA3SIMO | I/O | LVCMOS | DVCC | N/A |
| 100 | N/A | N/A | P10.0 (RD) | I/O | LVCMOS | DVCC | OFF |
| | | | UCB3STE | I/O | LVCMOS | DVCC | N/A |
| N/A | N/A | Pad | QFN Pad | – | – | N/A | – |


Copyright © 2015–2016, Texas Instruments Incorporated

## 4.3 Signal Descriptions

Table 4-2 describes the signals for all device variants and package options.

**Table 4-2. Signal Descriptions**

| FUNCTION | SIGNAL NAME | SIGNAL NO.(1) | | | SIGNAL TYPE(2) | DESCRIPTION |
|---|---|---|---|---|---|---|
| | | PZ | ZXH | RGC | | |
| ADC | A0 | 69 | C8 | 44 | I | ADC analog input A0 |
| | A1 | 68 | D8 | 43 | I | ADC analog input A1 |
| | A2 | 67 | D7 | 42 | I | ADC analog input A2 |
| | A3 | 66 | E9 | 41 | I | ADC analog input A3 |
| | A4 | 65 | E8 | 40 | I | ADC analog input A4 |
| | A5 | 64 | E7 | 39 | I | ADC analog input A5 |
| | A6 | 63 | F9 | 38 | I | ADC analog input A6 |
| | A7 | 62 | F8 | 37 | I | ADC analog input A7 |
| | A8 | 61 | F7 | 36 | I | ADC analog input A8 |
| | A9 | 60 | G9 | 35 | I | ADC analog input A9 |
| | A10 | 59 | G8 | 34 | I | ADC analog input A10 |
| | A11 | 58 | G7 | 33 | I | ADC analog input A11 |
| | A12 | 57 | H8 | N/A | I | ADC analog input A12 |
| | A13 | 56 | H9 | N/A | I | ADC analog input A13 |
| | A14 | 55 | H7 | N/A | I | ADC analog input A14 |
| | A15 | 54 | J9 | N/A | I | ADC analog input A15 |
| | A16 | 53 | N/A | N/A | I | ADC analog input A16 |
| | A17 | 52 | N/A | N/A | I | ADC analog input A17 |
| | A18 | 51 | N/A | N/A | I | ADC analog input A18 |
| | A19 | 50 | N/A | N/A | I | ADC analog input A19 |
| | A20 | 49 | N/A | N/A | I | ADC analog input A20 |
| | A21 | 48 | N/A | N/A | I | ADC analog input A21 |
| | A22 | 47 | N/A | N/A | I | ADC analog input A22 |
| | A23 | 46 | N/A | N/A | I | ADC analog input A23 |
| Clock | ACLK | 58 | G7 | 33 | O | ACLK clock output |
| | DCOR | 44 | J8 | 31 | – | DCO external resistor pin |
| | HFXIN | 86 | A5 | 55 | I | Input for high-frequency crystal oscillator HFXT |
| | HFXOUT | 85 | A6 | 54 | O | Output for high-frequency crystal oscillator HFXT |
| | HSMCLK | 60 | G9 | 35 | O | HSMCLK clock output |
| | LFXIN | 41 | J6 | 28 | I | Input for low-frequency crystal oscillator LFXT |
| | LFXOUT | 42 | J7 | 29 | O | Output of low-frequency crystal oscillator LFXT |
| | MCLK | 59 | G8 | 34 | O | MCLK clock output |

(1) N/A = not available
(2) I = input, O = output

**Table 4-2. Signal Descriptions (continued)**

| FUNCTION | SIGNAL NAME | SIGNAL NO.(1) | | | SIGNAL TYPE(2) | DESCRIPTION |
|---|---|---|---|---|---|---|
| | | PZ | ZXH | RGC | | |
| Comparator | C0.0 | 31 | G4 | 18 | I | Comparator_E0 input 0 |
| | C0.1 | 30 | H3 | 17 | I | Comparator_E0 input 1 |
| | C0.2 | 29 | G3 | N/A | I | Comparator_E0 input 2 |
| | C0.3 | 28 | J2 | N/A | I | Comparator_E0 input 3 |
| | C0.4 | 27 | H2 | N/A | I | Comparator_E0 input 4 |
| | C0.5 | 26 | J1 | N/A | I | Comparator_E0 input 5 |
| | C0.6 | 25 | N/A | N/A | I | Comparator_E0 input 6 |
| | C0.7 | 24 | N/A | N/A | I/O | Comparator_E0 input 7 |
| | C1.0 | 81 | B7 | 50 | I | Comparator_E1 input 0 |
| | C1.1 | 80 | B8 | 49 | I | Comparator_E1 input 1 |
| | C1.2 | 79 | A7 | N/A | I | Comparator_E1 input 2 |
| | C1.3 | 78 | A8 | N/A | I | Comparator_E1 input 3 |
| | C1.4 | 77 | B9 | N/A | I | Comparator_E1 input 4 |
| | C1.5 | 76 | A9 | N/A | I | Comparator_E1 input 5 |
| | C1.6 | 71 | C9 | 46 | I | Comparator_E1 input 6 |
| | C1.7 | 70 | D9 | 45 | I | Comparator_E1 input 7 |
| Debug | SWCLKTCK | 95 | A2 | 64 | I | Serial wire clock input (SWCLK)/JTAG clock input (TCK) |
| | SWDIOTMS | 94 | B2 | 63 | I/O | Serial wire data input/output (SWDIO)/JTAG test mode select (TMS) |
| | SWO | 93 | A3 | 62 | O | Serial wire trace output |
| | TDI | 92 | B3 | 61 | I | JTAG test data input |
| | TDO | 93 | A3 | 62 | O | JTAG test data output |
| GPIO | P1.0 | 4 | A1 | 1 | I/O | General-purpose digital I/O with port interrupt, wake-up, and glitch filtering capability |
| | P1.1 | 5 | B1 | 2 | I/O | General-purpose digital I/O with port interrupt and wake-up capability |
| | P1.2 | 6 | C4 | 3 | I/O | General-purpose digital I/O with port interrupt and wake-up capability |
| | P1.3 | 7 | D4 | 4 | I/O | General-purpose digital I/O with port interrupt and wake-up capability |
| | P1.4 | 8 | D3 | 5 | I/O | General-purpose digital I/O with port interrupt, wake-up, and glitch filtering capability |
| | P1.5 | 9 | C1 | 6 | I/O | General-purpose digital I/O with port interrupt, wake-up, and glitch filtering capability |
| | P1.6 | 10 | D1 | 7 | I/O | General-purpose digital I/O with port interrupt and wake-up capability |
| | P1.7 | 11 | E1 | 8 | I/O | General-purpose digital I/O with port interrupt and wake-up capability |


Copyright © 2015–2016, Texas Instruments Incorporated

**Table 4-2. Signal Descriptions (continued)**

| FUNCTION | SIGNAL NAME | SIGNAL NO.(1) | | | SIGNAL TYPE(2) | DESCRIPTION |
|---|---|---|---|---|---|---|
| | | PZ | ZXH | RGC | | |
| GPIO (continued) | P2.0 | 16 | E4 | 13 | I/O | General-purpose digital I/O with port interrupt and wake-up capability and with reconfigurable port mapping secondary function. This I/O can be configured for high drive operation with up to 20mA drive capability. |
| | P2.1 | 17 | F1 | 14 | I/O | General-purpose digital I/O with port interrupt and wake-up capability and with reconfigurable port mapping secondary function. This I/O can be configured for high drive operation with up to 20mA drive capability. |
| | P2.2 | 18 | E3 | 15 | I/O | General-purpose digital I/O with port interrupt and wake-up capability and with reconfigurable port mapping secondary function. This I/O can be configured for high drive operation with up to 20mA drive capability. |
| | P2.3 | 19 | F4 | 16 | I/O | General-purpose digital I/O with port interrupt and wake-up capability and with reconfigurable port mapping secondary function. This I/O can be configured for high drive operation with up to 20mA drive capability. |
| | P2.4 | 20 | F3 | N/A | I/O | General-purpose digital I/O with port interrupt and wake-up capability and with reconfigurable port mapping secondary function |
| | P2.5 | 21 | G1 | N/A | I/O | General-purpose digital I/O with port interrupt and wake-up capability and with reconfigurable port mapping secondary function |
| | P2.6 | 22 | G2 | N/A | I/O | General-purpose digital I/O with port interrupt and wake-up capability and with reconfigurable port mapping secondary function |
| | P2.7 | 23 | H1 | N/A | I/O | General-purpose digital I/O with port interrupt and wake-up capability and with reconfigurable port mapping secondary function |
| | P3.0 | 32 | J3 | 19 | I/O | General-purpose digital I/O with port interrupt, wake-up, and glitch filtering capability, and with reconfigurable port mapping secondary function |
| | P3.1 | 33 | H4 | 20 | I/O | General-purpose digital I/O with port interrupt and wake-up capability and with reconfigurable port mapping secondary function |
| | P3.2 | 34 | G5 | 21 | I/O | General-purpose digital I/O with port interrupt and wake-up capability and with reconfigurable port mapping secondary function |
| | P3.3 | 35 | J4 | 22 | I/O | General-purpose digital I/O with port interrupt and wake-up capability and with reconfigurable port mapping secondary function |
| | P3.4 | 36 | H5 | 23 | I/O | General-purpose digital I/O with port interrupt, wake-up, and glitch filtering capability, and with reconfigurable port mapping secondary function |
| | P3.5 | 37 | G6 | 24 | I/O | General-purpose digital I/O with port interrupt, wake-up, and glitch filtering capability, and with reconfigurable port mapping secondary function |
| | P3.6 | 38 | J5 | 25 | I/O | General-purpose digital I/O with port interrupt and wake-up capability and with reconfigurable port mapping secondary function |
| | P3.7 | 39 | H6 | 26 | I/O | General-purpose digital I/O with port interrupt and wake-up capability and with reconfigurable port mapping secondary function |

Copyright © 2015–2016, Texas Instruments Incorporated

**Table 4-2. Signal Descriptions (continued)**

| FUNCTION | SIGNAL NAME | SIGNAL NO.(1) | | | SIGNAL TYPE(2) | DESCRIPTION |
|---|---|---|---|---|---|---|
| | | PZ | ZXH | RGC | | |
| GPIO (continued) | P4.0 | 56 | H9 | N/A | I/O | General-purpose digital I/O with port interrupt and wake-up capability |
| | P4.1 | 57 | H8 | N/A | I/O | General-purpose digital I/O with port interrupt and wake-up capability |
| | P4.2 | 58 | G7 | 33 | I/O | General-purpose digital I/O with port interrupt and wake-up capability |
| | P4.3 | 59 | G8 | 34 | I/O | General-purpose digital I/O with port interrupt and wake-up capability |
| | P4.4 | 60 | G9 | 35 | I/O | General-purpose digital I/O with port interrupt and wake-up capability |
| | P4.5 | 61 | F7 | 36 | I/O | General-purpose digital I/O with port interrupt and wake-up capability |
| | P4.6 | 62 | F8 | 37 | I/O | General-purpose digital I/O with port interrupt and wake-up capability |
| | P4.7 | 63 | F9 | 38 | I/O | General-purpose digital I/O with port interrupt and wake-up capability |
| | P5.0 | 64 | E7 | 39 | I/O | General-purpose digital I/O with port interrupt and wake-up capability |
| | P5.1 | 65 | E8 | 40 | I/O | General-purpose digital I/O with port interrupt and wake-up capability |
| | P5.2 | 66 | E9 | 41 | I/O | General-purpose digital I/O with port interrupt and wake-up capability |
| | P5.3 | 67 | D7 | 42 | I/O | General-purpose digital I/O with port interrupt and wake-up capability |
| | P5.4 | 68 | D8 | 43 | I/O | General-purpose digital I/O with port interrupt and wake-up capability |
| | P5.5 | 69 | C8 | 44 | I/O | General-purpose digital I/O with port interrupt and wake-up capability |
| | P5.6 | 70 | D9 | 45 | I/O | General-purpose digital I/O with port interrupt and wake-up capability |
| | P5.7 | 71 | C9 | 46 | I/O | General-purpose digital I/O with port interrupt and wake-up capability |
| | P6.0 | 54 | J9 | N/A | I/O | General-purpose digital I/O with port interrupt and wake-up capability |
| | P6.1 | 55 | H7 | N/A | I/O | General-purpose digital I/O with port interrupt and wake-up capability |
| | P6.2 | 76 | A9 | N/A | I/O | General-purpose digital I/O with port interrupt and wake-up capability |
| | P6.3 | 77 | B9 | N/A | I/O | General-purpose digital I/O with port interrupt and wake-up capability |
| | P6.4 | 78 | A8 | N/A | I/O | General-purpose digital I/O with port interrupt and wake-up capability |
| | P6.5 | 79 | A7 | N/A | I/O | General-purpose digital I/O with port interrupt and wake-up capability |
| | P6.6 | 80 | B8 | 49 | I/O | General-purpose digital I/O with port interrupt, wake-up, and glitch filtering capability |
| | P6.7 | 81 | B7 | 50 | I/O | General-purpose digital I/O with port interrupt, wake-up, and glitch filtering capability |


Copyright © 2015–2016, Texas Instruments Incorporated

**Table 4-2. Signal Descriptions (continued)**

| FUNCTION | SIGNAL NAME | SIGNAL NO.(1) | | | SIGNAL TYPE(2) | DESCRIPTION |
|---|---|---|---|---|---|---|
| | | PZ | ZXH | RGC | | |
| GPIO (continued) | P7.0 | 88 | B5 | 57 | I/O | General-purpose digital I/O with reconfigurable port mapping secondary function (RD) |
| | P7.1 | 89 | C5 | 58 | I/O | General-purpose digital I/O with reconfigurable port mapping secondary function (RD) |
| | P7.2 | 90 | B4 | 59 | I/O | General-purpose digital I/O with reconfigurable port mapping secondary function (RD) |
| | P7.3 | 91 | A4 | 60 | I/O | General-purpose digital I/O with reconfigurable port mapping secondary function (RD) |
| | P7.4 | 26 | J1 | N/A | I/O | General-purpose digital I/O with reconfigurable port mapping secondary function (RD) |
| | P7.5 | 27 | H2 | N/A | I/O | General-purpose digital I/O with reconfigurable port mapping secondary function (RD) |
| | P7.6 | 28 | J2 | N/A | I/O | General-purpose digital I/O with reconfigurable port mapping secondary function (RD) |
| | P7.7 | 29 | G3 | N/A | I/O | General-purpose digital I/O with reconfigurable port mapping secondary function (RD) |
| | P8.0 | 30 | H3 | 17 | I/O | General-purpose digital I/O |
| | P8.1 | 31 | G4 | 18 | I/O | General-purpose digital I/O |
| | P8.2 | 46 | N/A | N/A | I/O | General-purpose digital I/O |
| | P8.3 | 47 | N/A | N/A | I/O | General-purpose digital I/O |
| | P8.4 | 48 | N/A | N/A | I/O | General-purpose digital I/O |
| | P8.5 | 49 | N/A | N/A | I/O | General-purpose digital I/O |
| | P8.6 | 50 | N/A | N/A | I/O | General-purpose digital I/O |
| | P8.7 | 51 | N/A | N/A | I/O | General-purpose digital I/O |
| | P9.0 | 52 | N/A | N/A | I/O | General-purpose digital I/O |
| | P9.1 | 53 | N/A | N/A | I/O | General-purpose digital I/O |
| | P9.2 | 74 | N/A | N/A | I/O | General-purpose digital I/O |
| | P9.3 | 75 | N/A | N/A | I/O | General-purpose digital I/O |
| | P9.4 | 96 | N/A | N/A | I/O | General-purpose digital I/O |
| | P9.5 | 97 | N/A | N/A | I/O | General-purpose digital I/O |
| | P9.6 | 98 | N/A | N/A | I/O | General-purpose digital I/O |
| | P9.7 | 99 | N/A | N/A | I/O | General-purpose digital I/O |
| | P10.0 | 100 | N/A | N/A | I/O | General-purpose digital I/O |
| | P10.1 | 1 | N/A | N/A | I/O | General-purpose digital I/O |
| | P10.2 | 2 | N/A | N/A | I/O | General-purpose digital I/O |
| | P10.3 | 3 | N/A | N/A | I/O | General-purpose digital I/O |
| | P10.4 | 24 | N/A | N/A | I/O | General-purpose digital I/O |
| | P10.5 | 25 | N/A | N/A | I/O | General-purpose digital I/O |
| | PJ.0 | 41 | J6 | 28 | I/O | General-purpose digital I/O |
| | PJ.1 | 42 | J7 | 29 | I/O | General-purpose digital I/O |
| | PJ.2 | 85 | A6 | 54 | I/O | General-purpose digital I/O |
| | PJ.3 | 86 | A5 | 55 | I/O | General-purpose digital I/O |
| | PJ.4 | 92 | B3 | 61 | I/O | General-purpose digital I/O |
| | PJ.5 | 93 | A3 | 62 | I/O | General-purpose digital I/O |

Copyright © 2015–2016, Texas Instruments Incorporated

**Table 4-2. Signal Descriptions (continued)**

| FUNCTION | SIGNAL NAME | SIGNAL NO.(1) | | | SIGNAL TYPE(2) | DESCRIPTION |
|---|---|---|---|---|---|---|
| | | PZ | ZXH | RGC | | |
| $I^2C$ | UCB0SCL | 11 | E1 | 8 | I/O | $I^2C$ clock – eUSCI_B0 $I^2C$ mode |
| | UCB0SDA | 10 | D1 | 7 | I/O | $I^2C$ data – eUSCI_B0 $I^2C$ mode |
| | UCB1SCL | 79 | A7 | N/A | I/O | $I^2C$ clock – eUSCI_B1 $I^2C$ mode |
| | UCB1SDA | 78 | A8 | N/A | I/O | $I^2C$ data – eUSCI_B1 $I^2C$ mode |
| | UCB3SCL | 3 | N/A | N/A | I/O | $I^2C$ clock – eUSCI_B3 $I^2C$ mode |
| | UCB3SCL | 81 | B7 | 50 | I/O | $I^2C$ clock – eUSCI_B3 $I^2C$ mode |
| | UCB3SDA | 2 | N/A | N/A | I/O | $I^2C$ data – eUSCI_B3 $I^2C$ mode |
| | UCB3SDA | 80 | B8 | 49 | I/O | $I^2C$ data – eUSCI_B3 $I^2C$ mode |


Copyright © 2015–2016, Texas Instruments Incorporated

**Table 4-2. Signal Descriptions (continued)**

| FUNCTION | SIGNAL NAME | SIGNAL NO.(1) | | | SIGNAL TYPE(2) | DESCRIPTION |
|---|---|---|---|---|---|---|
| | | PZ | ZXH | RGC | | |
| Port Mapper | PM_C0OUT | 89 | C5 | 58 | O | Default mapping: Comparator_E0 output |
| | PM_C1OUT | 90 | B4 | 59 | O | Default mapping: Comparator_E1 output |
| | PM_DMAE0 | 88 | B5 | 57 | I | Default mapping: DMA external trigger input |
| | PM_SMCLK | 88 | B5 | 57 | O | Default mapping: SMCLK clock output |
| | PM_TA0.0 | 91 | A4 | 60 | I/O | Default mapping: TA0 CCR0 capture: CCI0A input, compare: Out0 |
| | PM_TA0.1 | 20 | F3 | N/A | I/O | Default mapping: TA0 CCR1 capture: CCI1A input, compare: Out1 |
| | PM_TA0.2 | 21 | G1 | N/A | I/O | Default mapping: TA0 CCR2 capture: CCI2A input, compare: Out2 |
| | PM_TA0.3 | 22 | G2 | N/A | I/O | Default mapping: TA0 CCR3 capture: CCI3A input, compare: Out3 |
| | PM_TA0.4 | 23 | H1 | N/A | I/O | Default mapping: TA0 CCR4 capture: CCI4A input, compare: Out4 |
| | PM_TA0CLK | 89 | C5 | 58 | I | Default mapping: TA0 input clock |
| | PM_TA1.2 | 28 | J2 | N/A | I/O | Default mapping: TA1 CCR2 capture: CCI2A input, compare: Out2 |
| | PM_TA1.3 | 27 | H2 | N/A | I/O | Default mapping: TA1 CCR3 capture: CCI3A input, compare: Out3 |
| | PM_TA1.4 | 26 | J1 | N/A | I/O | Default mapping: TA1 CCR4 capture: CCI4A input, compare: Out4 |
| | PM_TA1CLK | 90 | B4 | 59 | I | Default mapping: TA1 input clock |
| | PM_UCA1CLK | 17 | F1 | 14 | I/O | Default mapping: Clock signal input – eUSCI_A1 SPI slave mode<br>Clock signal output – eUSCI_A1 SPI master mode |
| | PM_UCA1RXD | 18 | E3 | 15 | I | Default mapping: Receive data – eUSCI_A1 UART mode |
| | PM_UCA1SIMO | 19 | F4 | 16 | I/O | Default mapping: Slave in, master out – eUSCI_A1 SPI mode |
| | PM_UCA1SOMI | 18 | E3 | 15 | I/O | Default mapping: Slave out, master in – eUSCI_A1 SPI mode |
| | PM_UCA1STE | 16 | E4 | 13 | I/O | Default mapping: Slave transmit enable – eUSCI_A1 SPI mode |
| | PM_UCA1TXD | 19 | F4 | 16 | O | Default mapping: Transmit data – eUSCI_A1 UART mode |
| | PM_UCA2CLK | 33 | H4 | 20 | I/O | Default mapping: Clock signal input – eUSCI_A2 SPI slave mode<br>Clock signal output – eUSCI_A2 SPI master mode |
| | PM_UCA2RXD | 34 | G5 | 21 | I | Default mapping: Receive data – eUSCI_A2 UART mode |
| | PM_UCA2SIMO | 35 | J4 | 22 | I/O | Default mapping: Slave in, master out – eUSCI_A2 SPI mode |
| | PM_UCA2SOMI | 34 | G5 | 21 | I/O | Default mapping: Slave out, master in – eUSCI_A2 SPI mode |
| | PM_UCA2STE | 32 | J3 | 19 | I/O | Default mapping: Slave transmit enable – eUSCI_A2 SPI mode |
| | PM_UCA2TXD | 35 | J4 | 22 | O | Default mapping: Transmit data – eUSCI_A2 UART mode |

Copyright © 2015–2016, Texas Instruments Incorporated

### Table 4-2. Signal Descriptions (continued)

| FUNCTION | SIGNAL NAME | SIGNAL NO.[1] | | | SIGNAL TYPE[2] | DESCRIPTION |
|---|---|---|---|---|---|---|
| | | PZ | ZXH | RGC | | |
| Port Mapper (continued) | PM_UCB2CLK | 37 | G6 | 24 | I/O | Default mapping: Clock signal input – eUSCI_B2 SPI slave mode<br>Clock signal output – eUSCI_B2 SPI master mode |
| | PM_UCB2SCL | 39 | H6 | 26 | I | Default mapping: $I^2C$ clock – eUSCI_B2 $I^2C$ mode |
| | PM_UCB2SDA | 38 | J5 | 25 | I/O | Default mapping: $I^2C$ data – eUSCI_B2 $I^2C$ mode |
| | PM_UCB2SIMO | 38 | J5 | 25 | I/O | Default mapping: Slave in, master out – eUSCI_B2 SPI mode |
| | PM_UCB2SOMI | 39 | H6 | 26 | I/O | Default mapping: Slave out, master in – eUSCI_B2 SPI mode |
| | PM_UCB2STE | 36 | H5 | 23 | I/O | Default mapping: Slave transmit enable – eUSCI_B2 SPI mode |
| Power | AVCC1 | 45 | F6 | 32 | – | Analog power supply |
| | AVCC2 | 87 | D5 | 56 | – | Analog power supply |
| | AVSS1 | 43 | F5 | 30 | – | Analog ground supply |
| | AVSS2 | 84 | D6 | 53 | – | Analog ground supply |
| | AVSS3 | 40 | E5 | 27 | – | Analog ground supply |
| | DVCC1 | 13 | D2 | 10 | – | Digital power supply |
| | DVCC2 | 73 | C6 | 48 | – | Digital power supply |
| | DVSS1 | 15 | F2 | 12 | – | Digital ground supply |
| | DVSS2 | 72 | E6 | 47 | – | Digital ground supply |
| | DVSS3 | 82 | C7 | 51 | – | Must be connected to ground |
| | VCORE[3] | 12 | C2 | 9 | – | Regulated core power supply (internal use only, no external current loading) |
| | VSW | 14 | E2 | 11 | – | DC-to-DC converter switching output |
| RTC | RTCCLK | 59 | G8 | 34 | O | RTC_C clock calibration output |
| Reference | VREF+ | 70 | D9 | 45 | O | Internal shared reference voltage positive terminal |
| | VREF- | 71 | C9 | 46 | O | Internal shared reference voltage negative terminal |
| | VeREF+ | 70 | D9 | 45 | I | Positive terminal of external reference voltage to ADC |
| | VeREF- | 71 | C9 | 46 | I | Negative terminal of external reference voltage to ADC (recommended to connect to onboard ground) |

(3) VCORE is for internal use only. No external current loading is possible. VCORE should only be connected to the recommended capacitor value, $C_{VCORE}$.


Copyright © 2015–2016, Texas Instruments Incorporated

**Table 4-2. Signal Descriptions (continued)**

| FUNCTION | SIGNAL NAME | SIGNAL NO.(1) | | | SIGNAL TYPE(2) | DESCRIPTION |
|---|---|---|---|---|---|---|
| | | PZ | ZXH | RGC | | |
| SPI | UCA0CLK | 5 | B1 | 2 | I/O | Clock signal input – eUSCI_A0 SPI slave mode<br>Clock signal output – eUSCI_A0 SPI master mode |
| | UCA0SIMO | 7 | D4 | 4 | I/O | Slave in, master out – eUSCI_A0 SPI mode |
| | UCA0SOMI | 6 | C4 | 3 | I/O | Slave out, master in – eUSCI_A0 SPI mode |
| | UCA0STE | 4 | A1 | 1 | I/O | Slave transmit enable – eUSCI_A0 SPI mode |
| | UCA3CLK | 97 | N/A | N/A | I/O | Clock signal input – eUSCI_A3 SPI slave mode<br>Clock signal output – eUSCI_A3 SPI master mode |
| | UCA3SIMO | 99 | N/A | N/A | I/O | Slave in, master out – eUSCI_A3 SPI mode |
| | UCA3SOMI | 98 | N/A | N/A | I/O | Slave out, master in – eUSCI_A3 SPI mode |
| | UCA3STE | 96 | N/A | N/A | I/O | Slave transmit enable – eUSCI_A3 SPI mode |
| | UCB0CLK | 9 | C1 | 6 | I/O | Clock signal input – eUSCI_B0 SPI slave mode<br>Clock signal output – eUSCI_B0 SPI master mode |
| | UCB0SIMO | 10 | D1 | 7 | I/O | Slave in, master out – eUSCI_B0 SPI mode |
| | UCB0SOMI | 11 | E1 | 8 | I/O | Slave out, master in – eUSCI_B0 SPI mode |
| | UCB0STE | 8 | D3 | 5 | I/O | Slave transmit enable – eUSCI_B0 SPI mode |
| | UCB1CLK | 77 | B9 | N/A | I/O | Clock signal input – eUSCI_B1 SPI slave mode<br>Clock signal output – eUSCI_B1 SPI master mode |
| | UCB1SIMO | 78 | A8 | N/A | I/O | Slave in, master out – eUSCI_B1 SPI mode |
| | UCB1SOMI | 79 | A7 | N/A | I/O | Slave out, master in – eUSCI_B1 SPI mode |
| | UCB1STE | 76 | A9 | N/A | I/O | Slave transmit enable – eUSCI_B1 SPI mode |
| | UCB3CLK | 1 | N/A | N/A | I/O | Clock signal input – eUSCI_B3 SPI slave mode<br>Clock signal output – eUSCI_B3 SPI master mode |
| | UCB3CLK | 31 | G4 | 18 | I/O | Clock signal input – eUSCI_B3 SPI slave mode<br>Clock signal output – eUSCI_B3 SPI master mode |
| | UCB3SIMO | 2 | N/A | N/A | I/O | Slave in, master out – eUSCI_B3 SPI mode |
| | UCB3SIMO | 80 | B8 | 49 | I/O | Slave in, master out – eUSCI_B3 SPI mode |
| | UCB3SOMI | 3 | N/A | N/A | I/O | Slave out, master in – eUSCI_B3 SPI mode |
| | UCB3SOMI | 81 | B7 | 50 | I/O | Slave out, master in – eUSCI_B3 SPI mode |
| | UCB3STE | 30 | H3 | 17 | I/O | Slave transmit enable – eUSCI_B3 SPI mode |
| | UCB3STE | 100 | N/A | N/A | I/O | Slave transmit enable – eUSCI_B3 SPI mode |
| System | NMI | 83 | B6 | 52 | I | External nonmaskable interrupt |
| | RSTn | 83 | B6 | 52 | I | External reset (active low) |
| | SVMHOUT | 60 | G9 | 35 | O | SVMH output |
| Thermal | QFN Pad | N/A | N/A | Pad | – | QFN package exposed thermal pad. TI recommends connection to VSS. |

**Table 4-2. Signal Descriptions (continued)**

| FUNCTION | SIGNAL NAME | SIGNAL NO.(1) | | | SIGNAL TYPE(2) | DESCRIPTION |
|---|---|---|---|---|---|---|
| | | PZ | ZXH | RGC | | |
| Timer | PM_TA1.1 | 29 | G3 | N/A | I/O | Default mapping: TA1 CCR1 capture: CCI1A input, compare: Out1 |
| | TA1.0 | 30 | H3 | 17 | I/O | TA1 CCR0 capture: CCI0A input, compare: Out0 |
| | TA2.0 | 31 | G4 | 18 | I/O | TA2 CCR0 capture: CCI0A input, compare: Out0 |
| | TA2.1 | 70 | D9 | 45 | I/O | TA2 CCR1 capture: CCI1A input, compare: Out1 |
| | TA2.2 | 71 | C9 | 46 | I/O | TA2 CCR2 capture: CCI2A input, compare: Out2 |
| | TA2.3 | 80 | B8 | 49 | I/O | TA2 CCR3 capture: CCI3A input, compare: Out3 |
| | TA2.4 | 81 | B7 | 50 | I/O | TA2 CCR4 capture: CCI4A input, compare: Out4 |
| | TA2CLK | 58 | G7 | 33 | I | TA2 input clock |
| | TA3.0 | 24 | N/A | N/A | I/O | TA3 CCR0 capture: CCI0A input, compare: Out0 |
| | TA3.1 | 25 | N/A | N/A | I/O | TA3 CCR1 capture: CCI1A input, compare: Out1 |
| | TA3.2 | 46 | N/A | N/A | I/O | TA3 CCR2 capture: CCI2A input, compare: Out2 |
| | TA3.3 | 74 | N/A | N/A | I/O | TA3 CCR3 capture: CCI3A input, compare: Out3 |
| | TA3.4 | 75 | N/A | N/A | I/O | TA3 CCR4 capture: CCI4A input, compare: Out4 |
| | TA3CLK | 47 | N/A | N/A | I | TA3 input clock |
| UART | UCA0RXD | 6 | C4 | 3 | I | Receive data – eUSCI_A0 UART mode |
| | UCA0TXD | 7 | D4 | 4 | O | Transmit data – eUSCI_A0 UART mode |
| | UCA3RXD | 98 | N/A | N/A | I | Receive data – eUSCI_A3 UART mode |
| | UCA3TXD | 99 | N/A | N/A | O | Transmit data – eUSCI_A3 UART mode |


Copyright © 2015–2016, Texas Instruments Incorporated

## 4.4 Pin Multiplexing

Pin multiplexing for these devices is controlled by both register settings and operating modes (for example, if the device is in test mode). For details of the settings for each pin and diagrams of the multiplexed ports, see Section 6.12.

## 4.5 Buffer Types

Table 4-3 describes the buffer types that are referenced in Table 4-1.

**Table 4-3. Buffer Type**

| BUFFER TYPE (STANDARD) | NOMINAL VOLTAGE | HYSTERESIS | PU OR PD | NOMINAL PU OR PD STRENGTH (µA) | OUTPUT DRIVE STRENGTH (mA) | OTHER CHARACTERISTICS |
|---|---|---|---|---|---|---|
| Analog (1) | 3.0 V | N | N/A | N/A | N/A | See analog modules in *Specifications* for details |
| HVCMOS | 13.0 V | Y | N/A | N/A | See *Typical Characteristics* | |
| LVCMOS | 3.0 V | Y (2) | Programmable | See *General-Purpose I/Os* | See *Typical Characteristics* | |
| Power (DVCC) (3) | 3.0 V | N | N/A | N/A | N/A | SVSMH enables hysteresis on DVCC |
| Power (AVCC) (3) | 3.0 V | N | N/A | N/A | N/A | |
| Power (DVSS and AVSS) (3) | 0 V | N | N/A | N/A | N/A | |

(1) This is a switch, not a buffer.
(2) Only for input pins
(3) This is supply input, not a buffer.

## 4.6 Connection for Unused Pins

Table 4-4 lists the correct termination of all unused pins.

**Table 4-4. Connection for Unused Pins (1)**

| PIN | POTENTIAL | COMMENT |
|---|---|---|
| AVCC | $DV_{CC}$ | |
| AVSS | $DV_{SS}$ | |
| Px.0 to Px.7 | Open | Set to port function, output direction, and leave unconnected on the PC board |
| RSTn/NMI | $DV_{CC}$ or $V_{CC}$ | 47-kΩ pullup with 1.1-nF pulldown. |
| PJ.4/TDI | Open | The JTAG TDI pin is shared with general-purpose I/O function (PJ.4). If not being used, this pin should be set to port function, output direction. When used as JTAG TDI pin, it should remain open. |
| PJ.5/TDO/SWO | $DV_{CC}$ or $V_{CC}$ | The JTAG TDO/SWO pin is shared with general-purpose I/O function (PJ.5). If not being used, this pin should be set to port function, output direction. When used as JTAG TDO/SWO pin, it should be pulled down externally. |
| SWDIOTMS | $DV_{CC}$ or $V_{CC}$ | This pin should be pulled up externally. |
| SWCLKTCK | $DV_{SS}$ or $V_{SS}$ | This pin should be pulled down externally. |

(1) For any unused pin with a secondary function that is shared with general-purpose I/O, follow the guidelines for the Px.0 to Px.7 pins.

# 5 Specifications

## 5.1 Absolute Maximum Ratings[(1)]

over recommended ranges of supply voltage and operating free-air temperature (unless otherwise noted)

| | MIN | MAX | UNIT |
|---|---|---|---|
| Voltage applied at DVCC and AVCC pins to $V_{SS}$ | –0.3 | 4.17 | V |
| Voltage difference between DVCC and AVCC pins[(2)] | | ±0.3 | V |
| Voltage applied to any pin[(3)] | –0.3 | $V_{CC}$ + 0.3 V (4.17 V MAX) | V |
| Diode current at any device pin | | ±2 | mA |
| Storage temperature, $T_{stg}$ [(4)] | –40 | 125 | °C |
| Maximum junction temperature, $T_J$ | | 95 | °C |

(1) Stresses beyond those listed under *Absolute Maximum Ratings* may cause permanent damage to the device. These are stress ratings only, and functional operation of the device at these or any other conditions beyond those indicated under *Recommended Operating Conditions* is not implied. Exposure to absolute-maximum-rated conditions for extended periods may affect device reliability.
(2) Voltage differences between DVCC and AVCC exceeding the specified limits may cause malfunction of the device.
(3) All voltages referenced to $V_{SS}$.
(4) Higher temperature may be applied during board soldering according to the current JEDEC J-STD-020 specification with peak reflow temperatures not higher than classified on the device label on the shipping boxes or reels.

## 5.2 ESD Ratings

| | | | VALUE | UNIT |
|---|---|---|---|---|
| $V_{(ESD)}$ | Electrostatic discharge | Human-body model (HBM), per ANSI/ESDA/JEDEC JS-001[(1) (2)] | ±1000 | V |
| | | Charged-device model (CDM), per JEDEC specification JESD22-C101[(3)] | ±250 | |

(1) JEDEC document JEP155 states that 500-V HBM allows safe manufacturing with a standard ESD control process. Pins listed as ±1000 V may actually have higher performance.
(2) All pins pass HBM up to ±1000 V except the DVSS3 pin. The DVSS3 pin is used for TI internal test purposes. Connect the DVSS3 pin to supply ground on the customer application board.
(3) JEDEC document JEP157 states that 250-V CDM allows safe manufacturing with a standard ESD control process. Pins listed as ±250 V may actually have higher performance.

## 5.3 Recommended Operating Conditions

Typical data are based on $V_{CC}$ = 3.0 V, $T_A$ = 25°C (unless otherwise noted)

| | | MIN | NOM | MAX | UNIT |
|---|---|---|---|---|---|
| $V_{CC}$ | Supply voltage range at all DVCC and AVCC pins [(1) (2) (3)] — At power-up (with internal $V_{CC}$ supervision) | 1.71 | | 3.7 | V |
| | Supply voltage range at all DVCC and AVCC pins [(1) (2) (3)] — Normal operation with internal $V_{CC}$ supervision | 1.71 | | 3.7 | |
| | Supply voltage range at all DVCC and AVCC pins [(1) (2) (3)] — Normal operation without internal $V_{CC}$ supervision | 1.62 | | 3.7 | |
| $V_{SS}$ | Supply voltage on all DVSS and AVSS pins | | 0 | | V |
| $I_{INRUSH}$ | Inrush current into the $V_{CC}$ pins[(4)] | | | 100 | mA |
| $f_{MCLK}$ | Frequency of the CPU and AHB clock in the system[(5)] | 0 | | 48 | MHz |
| $T_A$ | Operating free-air temperature | –40 | | 85 | °C |
| $T_J$ | Operating junction temperature | –40 | | 85 | °C |

(1) TI recommends powering $AV_{CC}$ and $DV_{CC}$ from the same source. A maximum difference of ±0.1 V between $AV_{CC}$ and $DV_{CC}$ can be tolerated during power up and operation. Refer to Section 5.4 for decoupling capacitor recommendations.
(2) Supply voltage must not change faster than 1 V/ms. Faster changes can cause the VCCDET to trigger a reset even within the recommended supply voltage range.
(3) Modules may have a different supply voltage range specification. See the specification of the respective module in this data sheet.
(4) Does not include I/O currents (driven by application requirements).
(5) Operating frequency may require the flash to be accessed with wait states. Refer to Section 5.8 for further details.


Copyright © 2015–2016, Texas Instruments Incorporated

## 5.4 Recommended External Components(1) (2) (3)

| | | | MIN | TYP | MAX | UNIT |
|---|---|---|---|---|---|---|
| $C_{DVCC}$ | Capacitor on DVCC pin | For DC-DC operation(4) | 3.3 | 4.7 | | µF |
| | | For LDO-only operation | 3.3 | 4.7 | | |
| $C_{VCORE}$ | Capacitor on VCORE pin | For DC-DC operation, including capacitor tolerance | 1.54 | 4.7 | 9 | µF |
| | | For LDO-only operation, including capacitor tolerance | 70 | 100 | 9000 | nF |
| $C_{AVCC}$ | Capacitor on AVCC pin | | 3.3 | 4.7 | | µF |
| $L_{VSW}$ | Inductor between VSW and VCORE pins for DC-DC | | 3.3 | 4.7 | 13 | µH |
| $R_{LVSW-DCR}$ | Allowed DCR for $L_{VSW}$ | | | 150 | 350 | mΩ |
| $I_{SAT-LVSW}$ | $L_{VSW}$ saturation current | | 700 | | | mA |

(1) For optimum performance, select the component value to match the typical value given in the table.
(2) Refer to the section on board guidelines for further details on component selection, placement as well as related PCB design guidelines.
(3) Tolerance of the capacitance/inductance values should be taken into account when choosing a component, in order to ensure that the Min/Max ranges are never exceeded.
(4) $C_{DVCC}$ should not be smaller than $C_{VCORE}$.

## 5.5 Operating Mode $V_{CC}$ Ranges

over operating free-air temperature (unless otherwise noted)

| PARAMETER | OPERATING MODE | TEST CONDITIONS | MIN | MAX | UNIT |
|---|---|---|---|---|---|
| $V_{CC_LDO}$ (1) (2) | AM_LDO_VCORE0<br>AM_LF_VCORE0<br>LPM0_LDO_VCORE0<br>LPM0_LF_VCORE0<br>LPM3_VCORE0<br>LPM4_VCORE0<br>LPM3.5<br>AM_LDO_VCORE1<br>AM_LF_VCORE1<br>LPM0_LDO_VCORE1<br>LPM0_LF_VCORE1<br>LPM3_VCORE1<br>LPM4_VCORE1 | LDO active, SVSMH disabled | 1.62 | 3.7 | V |
| | | LDO active, SVSMH enabled | 1.71 | 3.7 | |
| $V_{CC_DCDC_DF0}$ | AM_DCDC_VCORE0<br>LPM0_DCDC_VCORE0<br>AM_DCDC_VCORE1<br>LPM0_DCDC_VCORE1 | DC-DC active, DC-DC operation not forced (DCDC_FORCE = 0), SVSMH enabled or disabled(3) | 2.0 | 3.7 | V |
| $V_{CC_DCDC_DF1}$ | AM_DCDC_VCORE0<br>LPM0_DCDC_VCORE0<br>AM_DCDC_VCORE1<br>LPM0_DCDC_VCORE1 | DC-DC active, DC-DC operation forced (DCDC_FORCE = 1), SVSMH enabled or disabled | 1.8 | 3.7 | V |
| $V_{CC_VCORE_OFF}$ (4) | LPM4.5 | LDO disabled, SVSMH disabled | 1.62 | 3.7 | V |
| | | LDO disabled, SVSMH enabled | 1.71 | 3.7 | |

(1) Flash remains active **only** in active modes and LPM0 modes.
(2) Low frequency active, Low frequency LPM0, LPM3, LPM4, and LPM3.5 modes are based on LDO **only**.
(3) When $V_{CC}$ falls below the specified Min value, the DC-DC operation will switch to LDO automatically, as long as the $V_{CC}$ drop is slower than the rate that is reliably detected. Refer to Table 5-19 for more details.
(4) Core voltage is switched off in LPM4.5 mode.

## 5.6 Operating Mode CPU Frequency Ranges(1)

over recommended ranges of supply voltage and operating free-air temperature (unless otherwise noted)

| PARAMETER | OPERATING MODE | DESCRIPTION | $f_{MCLK}$ | | UNIT |
|---|---|---|---|---|---|
| | | | MIN | MAX | |
| $f_{AM_LDO_VCORE0}$ | AM_LDO_VCORE0 | Normal performance mode with LDO as the active regulator | 0 | 24 | MHz |
| $f_{AM_LDO_VCORE1}$ | AM_LDO_VCORE1 | High performance mode with LDO as the active regulator | 0 | 48 | MHz |
| $f_{AM_DCDC_VCORE0}$ | AM_DCDC_VCORE0 | Normal performance mode with DC-DC as the active regulator | 0 | 24 | MHz |
| $f_{AM_DCDC_VCORE1}$ | AM_DCDC_VCORE1 | High performance mode with DC-DC as the active regulator | 0 | 48 | MHz |
| $f_{AM_LF_VCORE0}$ | AM_LF_VCORE0 | Low-frequency mode with LDO as the active regulator | 0 | 128 | kHz |
| $f_{AM_LF_VCORE1}$ | AM_LF_VCORE1 | Low-frequency mode with LDO as the active regulator | 0 | 128 | kHz |

(1) DMA can be operated at the same frequency as CPU.

## 5.7 Operating Mode Peripheral Frequency Ranges

over recommended ranges of supply voltage and operating free-air temperature (unless otherwise noted)

| PARAMETER | OPERATING MODE | DESCRIPTION | MIN | MAX | UNIT |
|---|---|---|---|---|---|
| $f_{AM_LPM0_VCORE0}$ | AM_LDO_VCORE0 | Peripheral frequency range in LDO or DC-DC based active or LPM0 modes for VCORE0 | 0 | 12 | MHz |
| | AM_DCDC_VCORE0 | | | | |
| | LPM0_LDO_VCORE0 | | | | |
| | LPM0_DCDC_VCORE0 | | | | |
| $f_{AM_LPM0_VCORE1}$ | AM_LDO_VCORE1 | Peripheral frequency range in LDO or DC-DC based active or LPM0 modes for VCORE1 | 0 | 24 | MHz |
| | AM_DCDC_VCORE1 | | | | |
| | LPM0_LDO_VCORE1 | | | | |
| | LPM0_DCDC_VCORE1 | | | | |
| $f_{AM_LPM0_LF}$ | AM_LF_VCORE0 | Peripheral frequency range in low-frequency active or low frequency LPM0 modes for VCORE0 and VCORE1 | 0 | 128 | kHz |
| | AM_LF_VCORE1 | | | | |
| | LPM0_LF_VCORE0 | | | | |
| | LPM0_LF_VCORE1 | | | | |
| $f_{LPM3}$(1) | LPM3_VCORE0 | Peripheral frequency in LPM3 mode for VCORE0 and VCORE1 | 0 | 32.768 | kHz |
| | LPM3_VCORE1 | | | | |
| $f_{LPM3.5}$(1) | LPM3.5 | Peripheral frequency in LPM3.5 mode | 0 | 32.768 | kHz |

(1) Only RTC and WDT can be active.


Copyright © 2015–2016, Texas Instruments Incorporated

## 5.8 Operating Mode Execution Frequency vs Flash Wait-State Requirements

over recommended ranges of supply voltage and operating free-air temperature (unless otherwise noted)

| PARAMETER | NUMBER OF FLASH WAIT STATES | FLASH READ MODE | MAXIMUM SUPPORTED MCLK FREQUENCY(1), (2) | | UNIT |
|---|---|---|---|---|---|
| | | | AM_LDO_VCORE0, AM_DCDC_VCORE0 | AM_LDO_VCORE1, AM_DCDC_VCORE1 | |
| $f_{MAX_NRM_FLWAIT0}$ | 0 | Normal read mode | 16 | 24 | MHz |
| $f_{MAX_NRM_FLWAIT1}$ | 1 | Normal read mode | 24 | 48 | MHz |
| $f_{MAX_ORM_FLWAIT0}$ | 0 | Other read modes(3) | 8 | 12 | MHz |
| $f_{MAX_ORM_FLWAIT1}$ | 1 | Other read modes(3) | 16 | 24 | MHz |
| $f_{MAX_ORM_FLWAIT2}$ | 2 | Other read modes(3) | 24 | 36 | MHz |
| $f_{MAX_ORM_FLWAIT3}$ | 3 | Other read modes(3) | 24 | 48 | MHz |

(1) Violation of the maximum frequency limitation for a given wait-state configuration results in non-deterministic data or instruction fetches from the flash memory.
(2) In low-frequency active modes, the flash can always be accessed in zero wait-state because the maximum MCLK frequency is limited to 128 kHz.
(3) Other read modes refer to Read Margin 0/1, Program Verify, and Erase Verify.

## 5.9 Current Consumption During Device Reset

over recommended ranges of supply voltage and operating free-air temperature (unless otherwise noted) (1) (2) (3)

| PARAMETER | | $V_{CC}$ | MIN | TYP | MAX | UNIT |
|---|---|---|---|---|---|---|
| $I_{RESET}$ | Current during device reset | 2.2 V | | 510 | | µA |
| | | 3.0 V | | 600 | 850 | |

(1) Device held in reset through RSTn/NMI pin.
(2) Current measured into $V_{CC}$.
(3) All other input pins tied to 0 V or $V_{CC}$. Outputs do not source or sync any current.

## 5.10 Current Consumption in LDO-Based Active Modes – Dhrystone 2.1 Program

over recommended operating free-air temperature (unless otherwise noted)(1) (2) (3) (4) (5)

| PARAMETER | EXECUTION MEMORY | $V_{CC}$ | MCLK = 1 MHz | | MCLK = 8 MHz | | MCLK = 16 MHz | | MCLK = 24 MHz | | MCLK = 32 MHz | | MCLK = 40 MHz | | MCLK = 48 MHz | | UNIT |
|---|---|---|---|---|---|---|---|---|---|---|---|---|---|---|---|---|---|
| | | | TYP | MAX | TYP | MAX | TYP | MAX | TYP | MAX | TYP | MAX | TYP | MAX | TYP | MAX | |
| $I_{AM_LDO_VCORE0,Flash}$(6) (7) (8) | Flash | 3.0 V | 490 | 625 | 1500 | 1700 | 2650 | 2950 | 3580 | 3900 | | | | | | | µA |
| $I_{AM_LDO_VCORE1,Flash}$(6) (7) (8) | Flash | 3.0 V | 510 | 685 | 1650 | 1900 | 2970 | 3300 | 4260 | 4700 | 5300 | 5800 | 6500 | 7100 | 7700 | 8400 | µA |
| $I_{AM_LDO_VCORE0,SRAM}$(9) | SRAM | 3.0 V | 435 | 565 | 1070 | 1240 | 1800 | 2010 | 2530 | 2800 | | | | | | | µA |
| $I_{AM_LDO_VCORE1,SRAM}$(9) | SRAM | 3.0 V | 450 | 620 | 1160 | 1370 | 1980 | 2250 | 2800 | 3120 | 3650 | 4020 | 4470 | 4900 | 5280 | 5760 | µA |

(1) MCLK sourced by DCO.
(2) Current measured into $V_{CC}$.
(3) All other input pins tied to 0 V or $V_{CC}$. Outputs do not source or sync any current.
(4) All SRAM banks kept active.
(5) All peripherals are inactive.
(6) Device executing the Dhrystone 2.1 program. Code execution from Flash, stack, and data in SRAM.
(7) Flash configured to minimum wait states required to support operation at given frequency and core voltage level.
(8) Flash instruction and data buffers are enabled (BUFI = BUFD = 1).
(9) Device executing the Dhrystone 2.1 program. Code execution from SRAM, stack and data in SRAM.

Copyright © 2015–2016, Texas Instruments Incorporated

## 5.11 Current Consumption in DC-DC-Based Active Modes – Dhrystone 2.1 Program

over recommended operating free-air temperature (unless otherwise noted)(1) (2) (3) (4) (5)

| PARAMETER | EXECUTION MEMORY | $V_{CC}$ | MCLK = 1 MHz | | MCLK = 8 MHz | | MCLK = 16 MHz | | MCLK = 24 MHz | | MCLK = 32 MHz | | MCLK = 40 MHz | | MCLK = 48 MHz | | UNIT |
|---|---|---|---|---|---|---|---|---|---|---|---|---|---|---|---|---|---|
| | | | TYP | MAX | TYP | MAX | TYP | MAX | TYP | MAX | TYP | MAX | TYP | MAX | TYP | MAX | |
| $I_{AM_DCDC_VCORE0,Flash}$ (6) (7) (8) | Flash | 3.0 V | 400 | 475 | 925 | 1050 | 1530 | 1720 | 2060 | 2300 | | | | | | | µA |
| $I_{AM_DCDC_VCORE1,Flash}$ (6) (7) (8) | Flash | 3.0 V | 430 | 550 | 1100 | 1280 | 1880 | 2140 | 2650 | 3000 | 3290 | 3700 | 4020 | 4500 | 4720 | 5300 | µA |
| $I_{AM_DCDC_VCORE0,SRAM}$ (9) | SRAM | 3.0 V | 370 | 450 | 680 | 780 | 1040 | 1180 | 1410 | 1600 | | | | | | | µA |
| $I_{AM_DCDC_VCORE1,SRAM}$ (9) | SRAM | 3.0 V | 390 | 510 | 790 | 940 | 1250 | 1440 | 1720 | 1960 | 2200 | 2480 | 2670 | 3000 | 3050 | 3420 | µA |

(1) MCLK sourced by DCO.
(2) Current measured into $V_{CC}$.
(3) All other input pins tied to 0 V or $V_{CC}$. Outputs do not source or sync any current.
(4) All SRAM banks kept active.
(5) All peripherals are inactive.
(6) Device executing the Dhrystone 2.1 program. Code execution from Flash. Stack and data in SRAM.
(7) Flash configured to minimum wait states required to support operation at given frequency and core voltage level.
(8) Flash instruction and data buffers are enabled (BUFI = BUFD = 1).
(9) Device executing the Dhrystone 2.1 program. Code execution from SRAM. Stack and data in SRAM.

## Current Consumption in Low-Frequency Active Modes – Dhrystone 2.1 Program

over recommended ranges of supply voltage and operating free-air temperature (unless otherwise noted)(1) (2) (3) (4) (5)

| PARAMETER | EXECUTION MEMORY | $V_{CC}$ | –40°C | | 25°C | | 60°C | | 85°C | | UNIT |
|---|---|---|---|---|---|---|---|---|---|---|---|
| | | | TYP | MAX | TYP | MAX | TYP | MAX | TYP | MAX | |
| $I_{AM_LF_VCORE0,\ Flash}$ (6) (7) (8) | Flash | 2.2 V | 75 | | 80 | | 95 | | 115 | | µA |
| | | 3.0 V | 78 | | 83 | 100 | 98 | | 118 | 200 | |
| $I_{AM_LF_VCORE1,\ Flash}$ (6) (7) (8) | Flash | 2.2 V | 78 | | 85 | | 105 | | 125 | | µA |
| | | 3.0 V | 81 | | 88 | 110 | 108 | | 128 | 245 | |
| $I_{AM_LF_VCORE0,\ SRAM}$ (9) | SRAM | 2.2 V | 68 | | 73 | | 90 | | 105 | | µA |
| | | 3.0 V | 71 | | 76 | 92 | 93 | | 108 | 190 | |
| $I_{AM_LF_VCORE1,\ SRAM}$ (9) | SRAM | 2.2 V | 70 | | 77 | | 98 | | 117 | | µA |
| | | 3.0 V | 73 | | 90 | 102 | 101 | | 120 | 235 | |

(1) Current measured into $V_{CC}$.
(2) All other input pins tied to 0 V or $V_{CC}$. Outputs do not source or sync any current.
(3) MCLK sourced by REFO at 128 kHz.
(4) All peripherals are inactive.
(5) SRAM banks 0 and 1 enabled for execution from flash, and SRAM banks 0 to 3 enabled for execution from SRAM.
(6) Flash configured to 0 wait states.
(7) Device executing the Dhrystone 2.1 program. Code execution from Flash. Stack and data in SRAM.
(8) Flash instruction and data buffers are enabled (BUFI = BUFD = 1).
(9) Device executing the Dhrystone 2.1 program. Code execution from SRAM. Stack and data also in SRAM.


Copyright © 2015–2016, Texas Instruments Incorporated

## 5.12 Typical Characteristics of Active Mode Currents for CoreMark Program

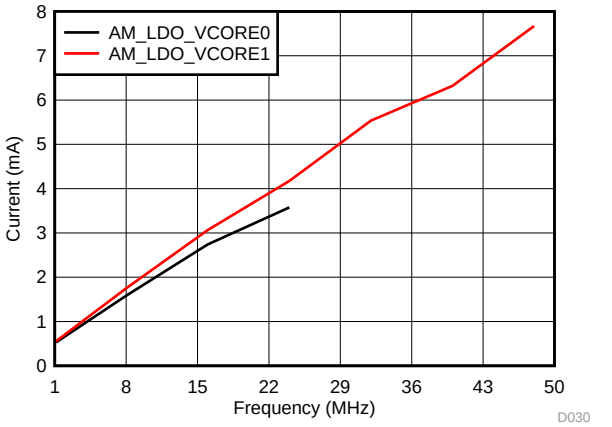


Flash Execution $V_{CC}$ = 3 V $T_A$ = 25°C

**Figure 5-1. Frequency vs Current Consumption**

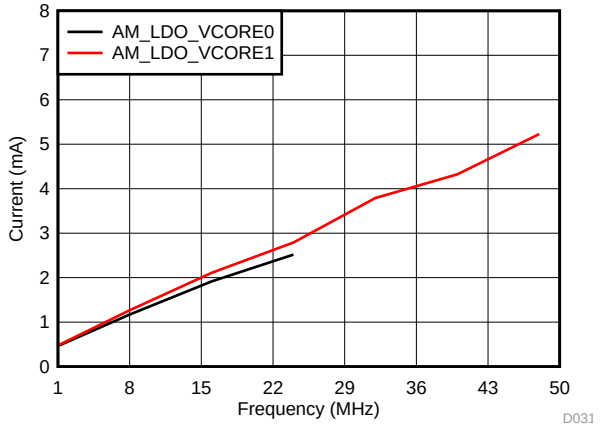


SRAM Execution $V_{CC}$ = 3 V $T_A$ = 25°C

**Figure 5-2. Frequency vs Current Consumption**

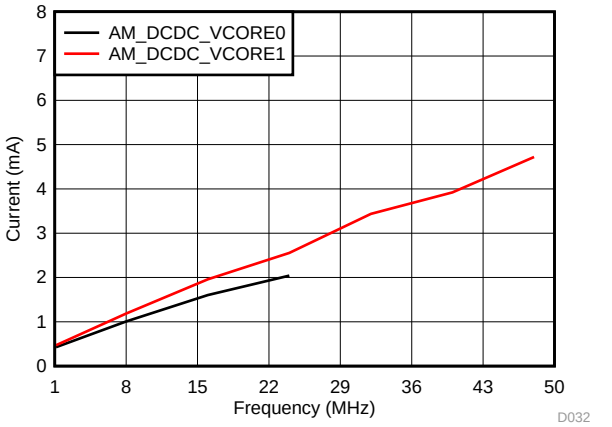


Flash Execution $V_{CC}$ = 3 V $T_A$ = 25°C

**Figure 5-3. Frequency vs Current Consumption**

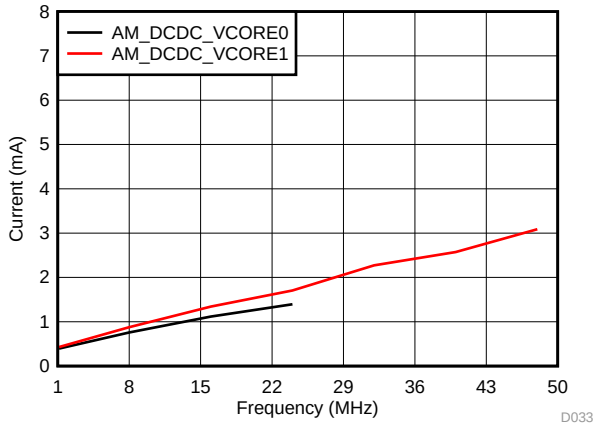


SRAM Execution $V_{CC}$ = 3 V $T_A$ = 25°C

**Figure 5-4. Frequency vs Current Consumption**

## 5.13 Typical Characteristics of Active Mode Currents for Prime Number Program

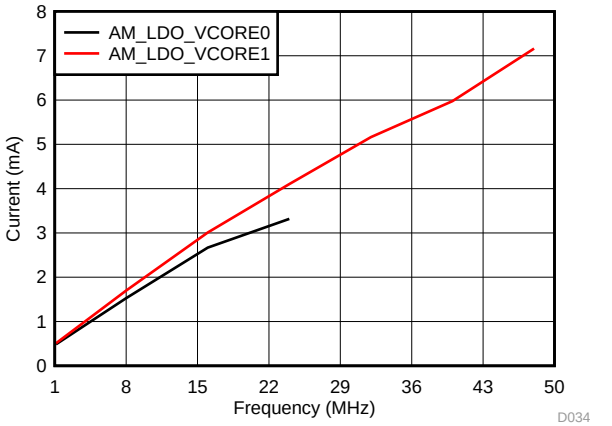


Flash Execution $V_{CC}$ = 3 V $T_A$ = 25°C

**Figure 5-5. Frequency vs Current Consumption**

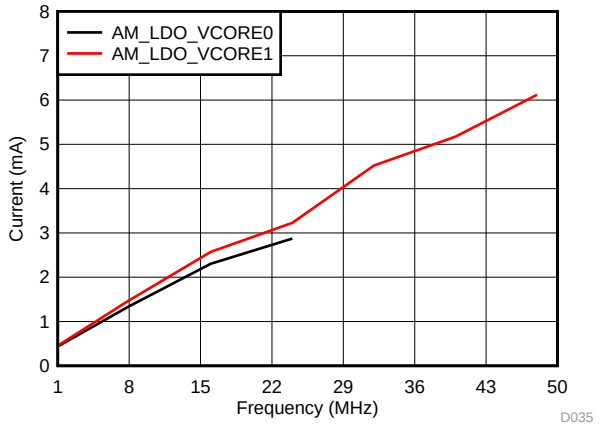


SRAM Execution $V_{CC}$ = 3 V $T_A$ = 25°C

**Figure 5-6. Frequency vs Current Consumption**

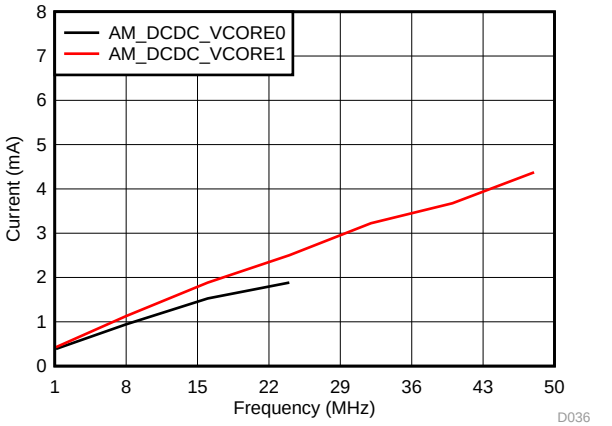


Flash Execution $V_{CC}$ = 3 V $T_A$ = 25°C

**Figure 5-7. Frequency vs Current Consumption**

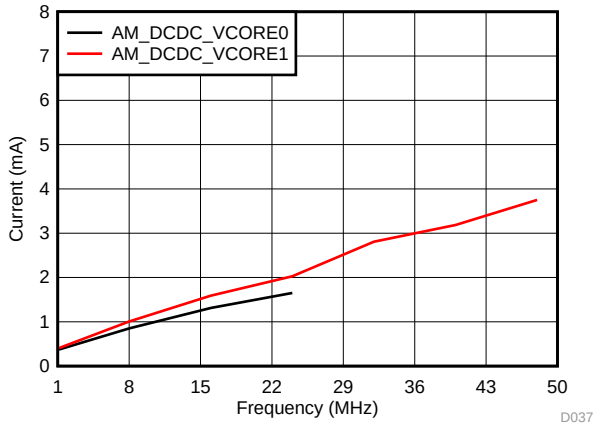


SRAM Execution $V_{CC}$ = 3 V $T_A$ = 25°C

**Figure 5-8. Frequency vs Current Consumption**


Copyright © 2015–2016, Texas Instruments Incorporated

## 5.14 Typical Characteristics of Active Mode Currents for Fibonacci Program

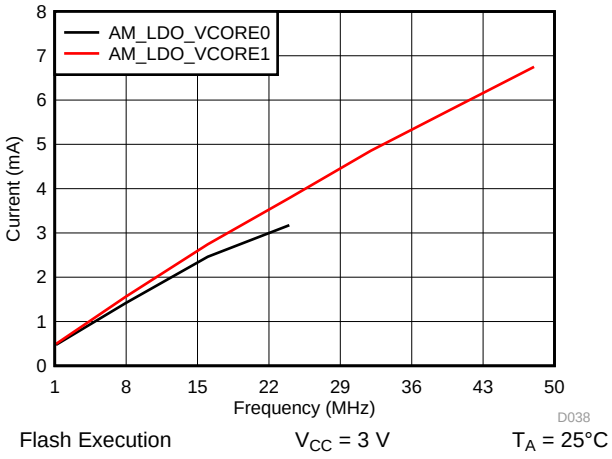


Flash Execution $V_{CC}$ = 3 V $T_A$ = 25°C

**Figure 5-9. Frequency vs Current Consumption**

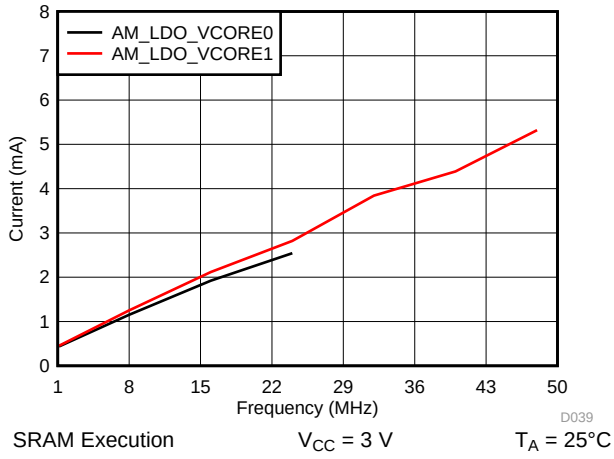


SRAM Execution $V_{CC}$ = 3 V $T_A$ = 25°C

**Figure 5-10. Frequency vs Current Consumption**

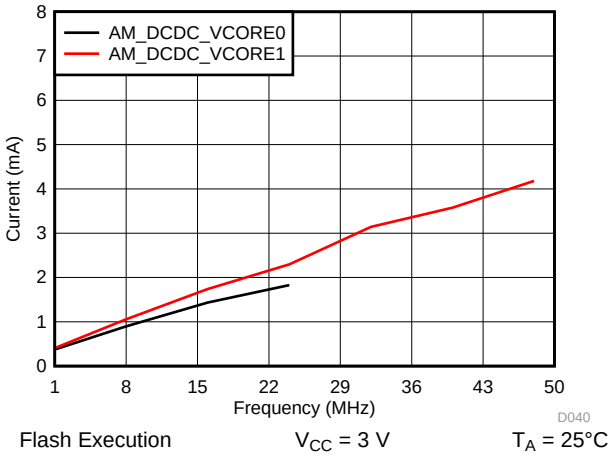


Flash Execution $V_{CC}$ = 3 V $T_A$ = 25°C

**Figure 5-11. Frequency vs Current Consumption**

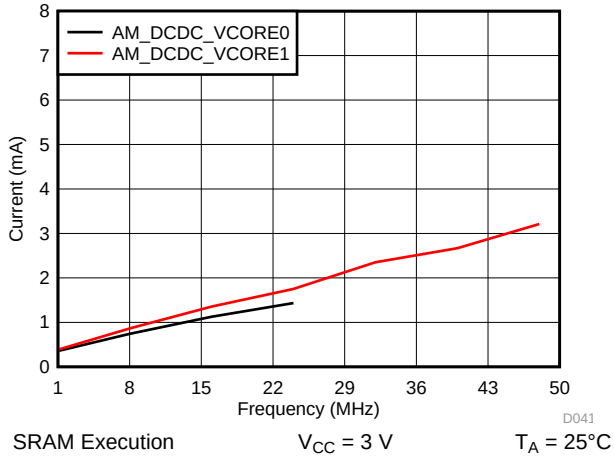


SRAM Execution $V_{CC}$ = 3 V $T_A$ = 25°C

**Figure 5-12. Frequency vs Current Consumption**

## 5.15 Typical Characteristics of Active Mode Currents for While(1) Program

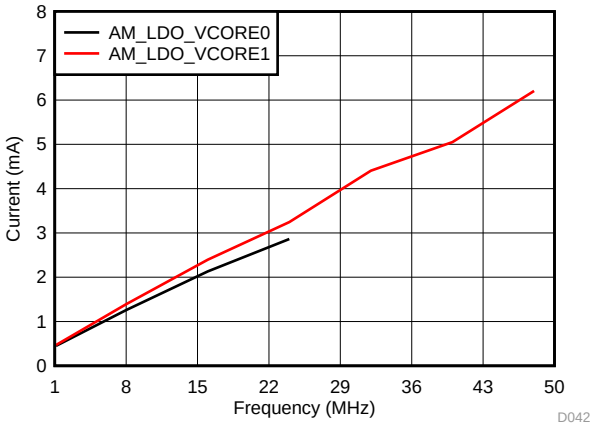


Flash Execution $V_{CC}$ = 3 V $T_A$ = 25°C

**Figure 5-13. Frequency vs Current Consumption**

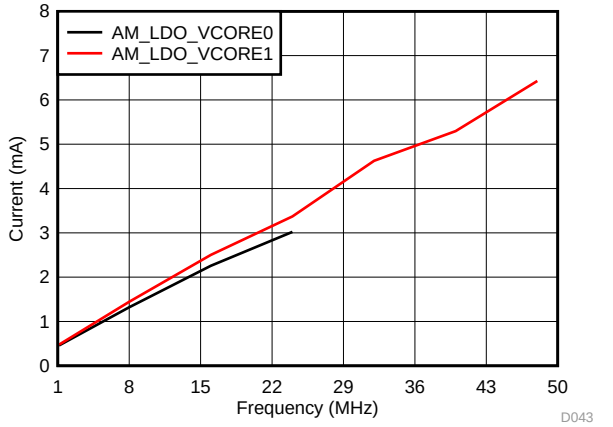


SRAM Execution $V_{CC}$ = 3 V $T_A$ = 25°C

**Figure 5-14. Frequency vs Current Consumption**

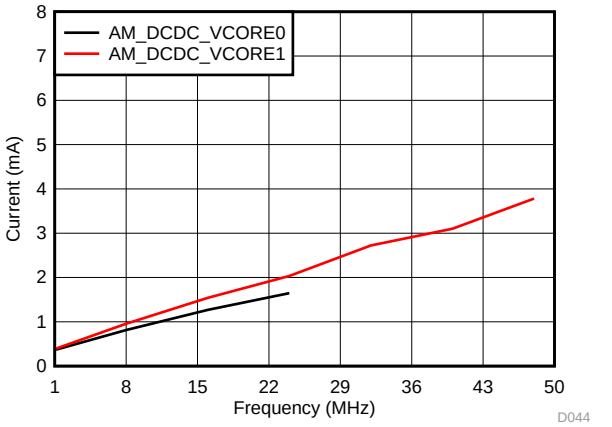


Flash Execution $V_{CC}$ = 3 V $T_A$ = 25°C

**Figure 5-15. Frequency vs Current Consumption**

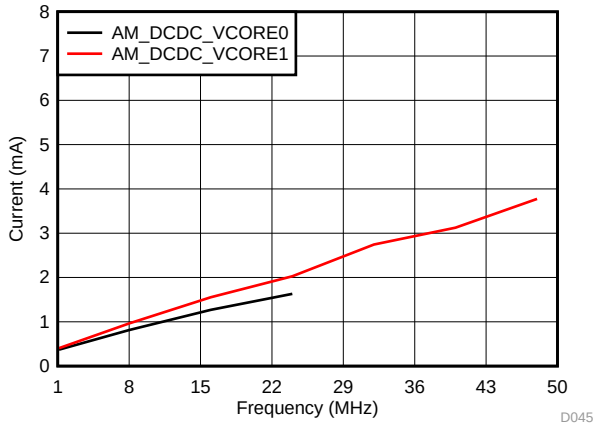


SRAM Execution $V_{CC}$ = 3 V $T_A$ = 25°C

**Figure 5-16. Frequency vs Current Consumption**


Copyright © 2015–2016, Texas Instruments Incorporated

## 5.16 Typical Characteristics of Low-Frequency Active Mode Currents for CoreMark Program

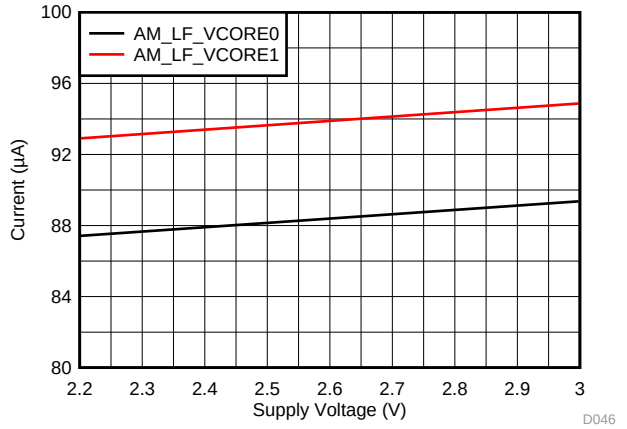


Flash Execution $T_A$ = 25°C MCLK = 128 kHz

**Figure 5-17. Supply Voltage vs Current Consumption**

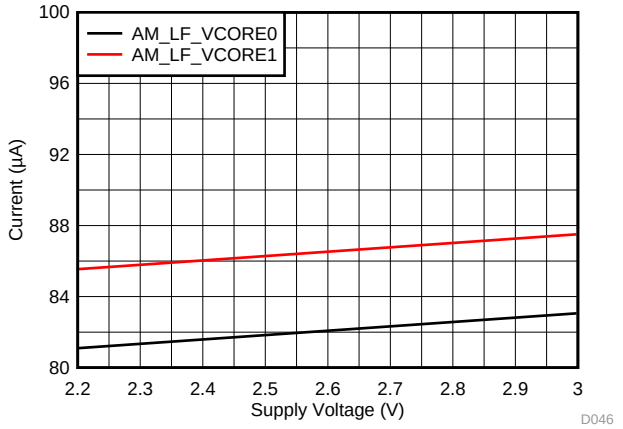


SRAM Execution $T_A$ = 25°C MCLK = 128 kHz

**Figure 5-18. Supply Voltage vs Current Consumption**

## 5.17 Current Consumption in LDO-Based LPM0 Modes

over recommended operating free-air temperature (unless otherwise noted)(1) (2) (3) (4) (5) (6)

| PARAMETER | $V_{CC}$ | MCLK = 1 MHz | | MCLK = 8 MHz | | MCLK = 16 MHz | | MCLK = 24 MHz | | MCLK = 32 MHz | | MCLK = 40 MHz | | MCLK = 48 MHz | | UNIT |
|---|---|---|---|---|---|---|---|---|---|---|---|---|---|---|---|---|
| | | TYP | MAX | TYP | MAX | TYP | MAX | TYP | MAX | TYP | MAX | TYP | MAX | TYP | MAX | |
| $I_{LPM0_LDO_VCORE0}$ | 2.2 V | 355 | 485 | 465 | 605 | 590 | 735 | 710 | 860 | | | | | | | µA |
| | 3.0 V | 355 | 485 | 465 | 605 | 590 | 735 | 710 | 860 | | | | | | | |
| $I_{LPM0_LDO_VCORE1}$ | 2.2 V | 365 | 530 | 495 | 665 | 640 | 820 | 775 | 970 | 965 | 1160 | 1130 | 1330 | 1235 | 1450 | µA |
| | 3.0 V | 365 | 530 | 495 | 665 | 640 | 820 | 775 | 970 | 965 | 1160 | 1130 | 1330 | 1230 | 1450 | |

(1) MCLK sourced by DCO.
(2) Current measured into $V_{CC}$.
(3) All other input pins tied to 0 V or $V_{CC}$. Outputs do not source or sync any current.
(4) CPU is OFF, Flash or SRAM not being accessed.
(5) All SRAM banks kept active.
(6) All peripherals are inactive.

## 5.18 Current Consumption in DC-DC-Based LPM0 Modes

over recommended operating free-air temperature (unless otherwise noted)(1) (2) (3) (4) (5) (6)

| PARAMETER | $V_{CC}$ | MCLK = 1 MHz | | MCLK = 8 MHz | | MCLK = 16 MHz | | MCLK = 24 MHz | | MCLK = 32 MHz | | MCLK = 40 MHz | | MCLK = 48 MHz | | UNIT |
|---|---|---|---|---|---|---|---|---|---|---|---|---|---|---|---|---|
| | | TYP | MAX | TYP | MAX | TYP | MAX | TYP | MAX | TYP | MAX | TYP | MAX | TYP | MAX | |
| $I_{LPM0_DCDC_VCORE0}$ | 2.2 V | 330 | 425 | 400 | 510 | 485 | 600 | 570 | 690 | | | | | | | µA |
| | 3.0 V | 325 | 400 | 380 | 460 | 440 | 530 | 510 | 610 | | | | | | | |
| $I_{LPM0_DCDC_VCORE1}$ | 2.2 V | 350 | 485 | 445 | 590 | 555 | 710 | 660 | 820 | 810 | 970 | 935 | 1110 | 1020 | 1200 | µA |
| | 3.0 V | 345 | 450 | 420 | 530 | 500 | 620 | 585 | 720 | 700 | 830 | 800 | 940 | 870 | 1020 | |

(1) MCLK sourced by DCO.
(2) Current measured into $V_{CC}$.
(3) All other input pins tied to 0 V or $V_{CC}$. Outputs do not source or sync any current.
(4) CPU is OFF, Flash or SRAM not being accessed.
(5) All SRAM banks kept active.
(6) All peripherals are inactive.

## 5.19 Current Consumption in Low-Frequency LPM0 Modes

over recommended ranges of supply voltage and operating free-air temperature (unless otherwise noted)(1) (2) (3) (4) (5) (6)

| PARAMETER | $V_{CC}$ | –40°C | | 25°C | | 60°C | | 85°C | | UNIT |
|---|---|---|---|---|---|---|---|---|---|---|
| | | TYP | MAX | TYP | MAX | TYP | MAX | TYP | MAX | |
| $I_{LPM0_LF_VCORE0}$ | 2.2 V | 58 | | 63 | | 78 | | 94 | | µA |
| | 3.0 V | 61 | | 66 | 82 | 81 | | 97 | 180 | |
| $I_{LPM0_LF_VCORE1}$ | 2.2 V | 60 | | 66 | | 84 | | 104 | | µA |
| | 3.0 V | 63 | | 69 | 90 | 87 | | 107 | 220 | |

(1) Current measured into $V_{CC}$.
(2) All other input pins tied to 0 V or $V_{CC}$. Outputs do not source or sync any current.
(3) MCLK sourced by REFO at 128 kHz.
(4) All peripherals are inactive.
(5) Bank 0 of SRAM kept active. Rest of the banks are powered down.
(6) CPU is OFF, Flash or SRAM not being accessed.


Copyright © 2015–2016, Texas Instruments Incorporated

## 5.20 Current Consumption in LPM3, LPM4 Modes

over recommended ranges of supply voltage and operating free-air temperature (unless otherwise noted)(1) (2) (3) (4) (5) (6)

| PARAMETER | $V_{CC}$ | –40°C | | 25°C | | 60°C | | 85°C | | UNIT |
|---|---|---|---|---|---|---|---|---|---|---|
| | | TYP | MAX | TYP | MAX | TYP | MAX | TYP | MAX | |
| $I_{LPM3_VCORE0_RTCLF}$ (7) (8) | 2.2 V | 0.52 | | 0.64 | | 1.11 | | 2.43 | | µA |
| | 3.0 V | 0.54 | | 0.66 | 0.85 | 1.13 | | 2.46 | 5 | |
| $I_{LPM3_VCORE0_RTCREFO}$ (9) (8) | 2.2 V | 0.85 | | 1.07 | | 1.55 | | 2.89 | | µA |
| | 3.0 V | 0.95 | | 1.16 | 1.35 | 1.64 | | 2.98 | 5.6 | |
| $I_{LPM3_VCORE1_RTCLF}$ (7) (8) | 2.2 V | 0.72 | | 0.93 | | 1.47 | | 2.95 | | µA |
| | 3.0 V | 0.75 | | 0.95 | 1.35 | 1.5 | | 2.98 | 6 | |
| $I_{LPM3_VCORE1_RTCREFO}$ (9) (8) | 2.2 V | 1.04 | | 1.3 | | 1.87 | | 3.34 | | µA |
| | 3.0 V | 1.14 | | 1.4 | 1.7 | 1.96 | | 3.44 | 6.5 | |
| $I_{LPM4_VCORE0}$ (10) | 2.2 V | 0.37 | | 0.48 | | 0.92 | | 2.19 | | µA |
| | 3.0 V | 0.4 | | 0.5 | 0.65 | 0.94 | | 2.2 | 4.8 | |
| $I_{LPM4_VCORE1}$ (10) | 2.2 V | 0.54 | | 0.7 | | 1.2 | | 2.58 | | µA |
| | 3.0 V | 0.56 | | 0.72 | 0.98 | 1.23 | | 2.6 | 5.6 | |

(1) Current measured into $V_{CC}$.
(2) All other input pins tied to 0 V or $V_{CC}$. Outputs do not source or sync any current.
(3) CPU is OFF, Flash powered down.
(4) Bank 0 of SRAM retained, all other banks powered down.
(5) Refer to Table 5-47 for details on additional current consumed for each extra Bank that is enabled for retention.
(6) SVSMH is disabled.
(7) RTC sourced by LFXT. Effective load capacitance of LF crystal is 3.7 pF.
(8) WDT module is disabled.
(9) RTC sourced by REFO.
(10) RTC and WDT modules disabled.

## 5.21 Current Consumption in LPM3.5, LPM4.5 Modes

over recommended ranges of supply voltage and operating free-air temperature (unless otherwise noted)(1) (2)

| PARAMETER | $V_{CC}$ | –40°C | | 25°C | | 60°C | | 85°C | | UNIT |
|---|---|---|---|---|---|---|---|---|---|---|
| | | TYP | MAX | TYP | MAX | TYP | MAX | TYP | MAX | |
| $I_{LPM3.5_RTCLF}$ (3) (4) (5) (6) (7) | 2.2 V | 0.48 | | 0.6 | | 1.07 | | 2.36 | | µA |
| | 3.0 V | 0.5 | | 0.63 | 0.81 | 1.1 | | 2.38 | 4.9 | |
| $I_{LPM3.5_RTCREFO}$ (3) (4) (8) (6) (7) | 2.2 V | 0.82 | | 1.03 | | 1.52 | | 2.81 | | µA |
| | 3.0 V | 0.92 | | 1.12 | 1.3 | 1.61 | | 2.9 | 5.5 | |
| $I_{LPM4.5}$ (9) (7) | 2.2 V | 10 | | 20 | | 45 | | 125 | | nA |
| | 3.0 V | 15 | | 25 | 35 | 50 | | 150 | 300 | |

(1) Current measured into $V_{CC}$.
(2) All other input pins tied to 0 V or $V_{CC}$. Outputs do not source or sync any current.
(3) CPU and Flash are powered down.
(4) Bank 0 of SRAM retained, all other banks powered down.
(5) RTC sourced by LFXT. Effective load capacitance of LF crystal is 3.7 pF.
(6) WDT module is disabled.
(7) SVSMH is disabled.
(8) RTC sourced by REFO.
(9) No core voltage. CPU, Flash and all banks of SRAM powered down.

Copyright © 2015–2016, Texas Instruments Incorporated

## 5.22 Current Consumption of Digital Peripherals

over recommended ranges of supply voltage and operating free-air temperature (unless otherwise noted)[1]

| PARAMETER | TEST CONDITIONS | TYP | MAX | UNIT |
|---|---|---|---|---|
| $I_{TIMER_A}$ | Timer_A configured as PWM timer with 50% duty cycle | 5 | | µA/MHz |
| $I_{TIMER32}$ | Timer32 enabled | 3.5 | | µA/MHz |
| $I_{UART}$ | eUSCI_A configured in UART mode. | 6.5 | | µA/MHz |
| $I_{SPI}$ | eUSCI_A configured in SPI master mode | 5 | | µA/MHz |
| $I_{I2C}$ | eUSCI_B configured in $I^2C$ master mode | 5 | | µA/MHz |
| $I_{WDT_A}$ | WDT_A configured in interval timer mode | 6 | | µA/MHz |
| $I_{RTC_C}$ | RTC_C enabled and sourced from 32-kHz LFXT | 100 | | nA |
| $I_{AES256}$ | AES256 active. | 19 | | µA/MHz |
| $I_{CRC32}$ | CRC32 active. | 2 | | µA/MHz |

(1) Measured with VCORE = 1.2 V.

## 5.23 Thermal Resistance Characteristics

| THERMAL METRICS[1] | | PACKAGE | VALUE[2] | UNIT |
|---|---|---|---|---|
| $R\theta_{JA}$ | Junction-to-ambient thermal resistance, still air[3] | LQFP-100 (PZ) | 50.9 | °C/W |
| $R\theta_{JC(TOP)}$ | Junction-to-case (top) thermal resistance[4] | | 9.7 | °C/W |
| $R\theta_{JB}$ | Junction-to-board thermal resistance[5] | | 27.2 | °C/W |
| $\Psi_{JB}$ | Junction-to-board thermal characterization parameter | | 26.9 | °C/W |
| $\Psi_{JT}$ | Junction-to-top thermal characterization parameter | | 0.2 | °C/W |
| $R\theta_{JC(BOTTOM)}$ | Junction-to-case (bottom) thermal resistance[6] | | N/A | °C/W |
| $R\theta_{JA}$ | Junction-to-ambient thermal resistance, still air[3] | NFBGA-80 (ZXH) | 58.1 | °C/W |
| $R\theta_{JC(TOP)}$ | Junction-to-case (top) thermal resistance[4] | | 26.1 | °C/W |
| $R\theta_{JB}$ | Junction-to-board thermal resistance[5] | | 22.6 | °C/W |
| $\Psi_{JB}$ | Junction-to-board thermal characterization parameter | | 22.0 | °C/W |
| $\Psi_{JT}$ | Junction-to-top thermal characterization parameter | | 0.5 | °C/W |
| $R\theta_{JC(BOTTOM)}$ | Junction-to-case (bottom) thermal resistance[6] | | N/A | °C/W |
| $R\theta_{JA}$ | Junction-to-ambient thermal resistance, still air[3] | VQFN-64 (RGC) | 29.4 | °C/W |
| $R\theta_{JC(TOP)}$ | Junction-to-case (top) thermal resistance[4] | | 14.8 | °C/W |
| $R\theta_{JB}$ | Junction-to-board thermal resistance[5] | | 8.3 | °C/W |
| $\Psi_{JB}$ | Junction-to-board thermal characterization parameter | | 8.2 | °C/W |
| $\Psi_{JT}$ | Junction-to-top thermal characterization parameter | | 0.2 | °C/W |
| $R\theta_{JC(BOTTOM)}$ | Junction-to-case (bottom) thermal resistance[6] | | 1.0 | °C/W |

(1) For more information about traditional and new thermal metrics, see *Semiconductor and IC Package Thermal Metrics*.
(2) N/A = not applicable
(3) The junction-to-ambient thermal resistance under natural convection is obtained in a simulation on a JEDEC-standard, High-K board, as specified in JESD51-7, in an environment described in JESD51-2a.
(4) The junction-to-case (top) thermal resistance is obtained by simulating a cold plate test on the package top. No specific JEDEC-standard test exists, but a close description can be found in the ANSI SEMI standard G30-88.
(5) The junction-to-board thermal resistance is obtained by simulating in an environment with a ring cold plate fixture to control the PCB temperature, as described in JESD51-8.
(6) The junction-to-case (bottom) thermal resistance is obtained by simulating a cold plate test on the exposed (power) pad. No specific JEDEC standard test exists, but a close description can be found in the ANSI SEMI standard G30-88.


Copyright © 2015–2016, Texas Instruments Incorporated

## 5.24 Timing and Switching Characteristics

### 5.24.1 Reset Timing

Table 5-1 lists the latencies to recover from different types of resets.

**Table 5-1. Reset Recovery Latencies**

over recommended ranges of supply voltage and operating free-air temperature (unless otherwise noted) (1)

| PARAMETER | | MIN | TYP | MAX | UNIT |
|---|---|---|---|---|---|
| $t_{SOFT}$ | Latency from release of soft reset to first CPU instruction fetch | | 5 | | MCLK cycles |
| $t_{HARD}$ | Latency from release of hard reset to release of soft reset | | 25 | | MCLK cycles |
| $t_{POR}$ | Latency from release of device POR to release of hard reset | | 15 | 25 | µs |
| $t_{COLDPWR,100\ nF}$ | Latency from a cold power-up condition to release of device POR, $C_{VCORE}$ = 100 nF | | 300 | 400 | µs |
| $t_{COLDPWR,4.7\ \mu F}$ | Latency from a cold power-up condition to release of device POR, $C_{VCORE}$ = 4.7 µF | | 400 | 500 | µs |

(1) Refer to Section 6.8.1 for details on the various classes of resets on the device

Table 5-2 lists the latencies to recover from an external reset applied on RSTn pin.

**Table 5-2. External Reset Recovery Latencies(1)**

over recommended ranges of supply voltage and operating free-air temperature (unless otherwise noted)

| PARAMETER | TEST CONDITIONS | MIN | MAX | UNIT |
|---|---|---|---|---|
| $t_{AM_RSTn}$ | External reset applied when device is in LDO or DC-DC based active modes, MCLK = 1 to 48 MHz | | 5 | ms |
| $t_{AMLF_RSTn,\ 128\ kHz}$ | External reset applied when device is in low-frequency active modes, MCLK = 128 kHz | | 5.5 | ms |
| $t_{AMLF_RSTn,\ 32\ kHz}$ | External reset applied when device is in low-frequency active modes, MCLK = 32.768 kHz | | 6.5 | ms |
| $t_{LPM0_RSTn}$ | External reset applied when device is in LDO or DC-DC based LPM0 modes, MCLK = 1 to 48 MHz | | 5 | ms |
| $t_{LPM0LF_RSTn,\ 128\ kHz}$ | External reset applied when device is in low-frequency LPM0 modes, MCLK = 128 kHz | | 5.5 | ms |
| $t_{LPM0LF_RSTn,\ 32\ kHz}$ | External reset applied when device is in low-frequency LPM0 modes, MCLK = 32.768 kHz | | 6.5 | ms |
| $t_{LPM3_LPM4_RSTn}$ | External reset applied when device is in LPM3 or LPM4 modes, MCLK = 24 or 48 MHz while entering LPM3 or LPM4 modes | | 5 | ms |
| $t_{LPMx.5_RSTn}$ | External reset applied when device is in LPM3.5 or LPM4.5 modes | | 5 | ms |

(1) External reset is applied on RSTn pin, and the latency is measured from release of external reset to start of user application code.

Copyright © 2015–2016, Texas Instruments Incorporated

### 5.24.2 Mode Transition Timing

Table 5-3 lists the latencies required to change between different active modes.

**Table 5-3. Active Mode Transition Latencies**

over recommended ranges of supply voltage and operating free-air temperature (unless otherwise noted)

| PARAMETER | ORIGINAL OPERATING MODE | FINAL OPERATING MODE | TEST CONDITIONS | TYP | MAX | UNIT |
|---|---|---|---|---|---|---|
| $t_{OFF_AMLDO0}$ | Power Off | AM_LDO_VCORE0 | From $V_{CC}$ reaching 1.71 V to start of user application code | | 6 | ms |
| $t_{AMLDO0_AMLDO1}$ | AM_LDO_VCORE0 | AM_LDO_VCORE1 | Transition from AM_LDO_VCORE0 to AM_LDO_VCORE1 MCLK frequency = 24 MHz | 300 | 350 | µs |
| $t_{AMLDO1_AMLDO0}$ | AM_LDO_VCORE1 | AM_LDO_VCORE0 | Transition from AM_LDO_VCORE1 to AM_LDO_VCORE0 MCLK frequency = 24 MHz | 4 | 5 | µs |
| $t_{AMLDO0_AMDCDC0}$ | AM_LDO_VCORE0 | AM_DCDC_VCORE0 | Transition from AM_LDO_VCORE0 to AM_DCDC_VCORE0 MCLK frequency = 24 MHz | 20 | 30 | µs |
| $t_{AMDCDC0_AMLDO0}$ | AM_DCDC_VCORE0 | AM_LDO_VCORE0 | Transition from AM_DCDC_VCORE0 to AM_LDO_VCORE0 MCLK frequency = 24 MHz | 10 | 15 | µs |
| $t_{AMLDO1_AMDCDC1}$ | AM_LDO_VCORE1 | AM_DCDC_VCORE1 | Transition from AM_LDO_VCORE1 to AM_DCDC_VCORE1 MCLK frequency = 48 MHz | 20 | 30 | µs |
| $t_{AMDCDC1_AMLDO1}$ | AM_DCDC_VCORE1 | AM_LDO_VCORE1 | Transition from AM_DCDC_VCORE1 to AM_LDO_VCORE1 MCLK frequency = 48 MHz | 10 | 15 | µs |
| $t_{AMLDO0_AMLF0}$ | AM_LDO_VCORE0 | AM_LF_VCORE0 | Transition from AM_LDO_VCORE0 to AM_LF_VCORE0 SELM = 2, REFO frequency = 128 kHz | 90 | 100 | µs |
| $t_{AMLF0_AMLDO0}$ | AM_LF_VCORE0 | AM_LDO_VCORE0 | Transition from AM_LF_VCORE0 to AM_LDO_VCORE0 SELM = 2, REFO frequency = 128 kHz | 50 | 60 | µs |
| $t_{AMLDO1_AMLF1}$ | AM_LDO_VCORE1 | AM_LF_VCORE1 | Transition from AM_LDO_VCORE1 to AM_LF_VCORE1 SELM = 2, REFO frequency = 128 kHz | 90 | 100 | µs |
| $t_{AMLF1_AMLDO1}$ | AM_LF_VCORE1 | AM_LDO_VCORE1 | Transition from AM_LF_VCORE1 to AM_LDO_VCORE1 SELM = 2, REFO frequency = 128 kHz | 50 | 60 | µs |


Copyright © 2015–2016, Texas Instruments Incorporated

Table 5-4 lists the latencies required to change between different active and LPM0 modes.

**Table 5-4. LPM0 Mode Transition Latencies**

over recommended ranges of supply voltage and operating free-air temperature (unless otherwise noted)

| PARAMETER | ORIGINAL OPERATING MODE | FINAL OPERATING MODE | TEST CONDITIONS | TYP | MAX | UNIT |
|---|---|---|---|---|---|---|
| $t_{AMLDOx_LPM0LDOx}$ (1) | AM_LDO_VCOREx | LPM0_LDO_VCOREx | Transition from AM_LDO_VCORE0/1 to LPM0_LDO_VCORE0/1 | 1 | | MCLK cycles |
| $t_{LPM0LDOx_AMLDOx}$ (2) | LPM0_LDO_VCOREx | AM_LDO_VCOREx | Transition from LPM0_LDO_VCORE0/1 to AM_LDO_VCORE0/1 through I/O interrupt | 3 | 4 | MCLK cycles |
| $t_{AMDCDCx_LPM0DCDCx}$ (1) | AM_DCDC_VCOREx | LPM0_DCDC_VCOREx | Transition from AM_DCDC_VCORE0/1 to LPM0_DCDC_VCORE0/1 | 1 | | MCLK cycles |
| $t_{LPM0DCDCx_AMDCDCx}$ (2) | LPM0_DCDC_VCOREx | AM_DCDC_VCOREx | Transition from LPM0_DCDC_VCORE0/1 to AM_DCDC_VCORE0/1 through I/O interrupt | 3 | 4 | MCLK cycles |
| $t_{AMLFx_LPM0LFx}$ (1) | AM_LF_VCOREx | LPM0_LF_VCOREx | Transition from AM_LF_VCORE0/1 to LPM0_LF_VCORE0/1 | 1 | | MCLK cycles |
| $t_{LPM0LFx_AMLFx}$ (2) | LPM0_LF_VCOREx | AM_LF_VCOREx | Transition from LPM0_LF_VCORE0/1 to AM_LF_VCORE0/1 through I/O interrupt | 3 | 4 | MCLK cycles |

(1) This is the latency between execution of WFI instruction by CPU to assertion of SLEEPING signal at CPU output.
(2) This is the latency between I/O interrupt event to deassertion of SLEEPING signal at CPU output.

Table 5-5 lists the latencies required to change between different active modes and LPM3 or LPM4 modes.

### Table 5-5. LPM3, LPM4 Mode Transition Latencies

over recommended ranges of supply voltage and operating free-air temperature (unless otherwise noted)

| PARAMETER | ORIGINAL OPERATING MODE | FINAL OPERATING MODE | TEST CONDITIONS | | TYP | MAX | UNIT |
|---|---|---|---|---|---|---|---|
| $t_{AMLDO0_LPMx0}$ (1) | AM_LDO_VCORE0 | LPM3_LPM4_VCORE0 | Transition from AM_LDO_VCORE0 to LPM3 or LPM4 at VCORE0 | SELM = 3. DCO frequency = 24 MHz | 22 | 24 | µs |
| $t_{LPMx0_AMLDO0_NORIO}$ (2) | LPM3_LPM4_VCORE0 | AM_LDO_VCORE0 | Transition from LPM3 or LPM4 at VCORE0 to AM_LDO_VCORE0 through wake-up event from non-glitch filter type I/O | SELM = 3. DCO frequency = 24 MHz | 8 | 9 | µs |
| $t_{LPMx0_AMLDO0_GFLTIO}$ (2) | LPM3_LPM4_VCORE0 | AM_LDO_VCORE0 | Transition from LPM3 or LPM4 at VCORE0 to AM_LDO_VCORE0 through wake-up event from glitch filter type I/O, GLTFLT_EN = 1 | SELM = 3. DCO frequency = 24 MHz | 9 | 10 | µs |
| $t_{AMLDO1_LPMx1}$ (1) | AM_LDO_VCORE1 | LPM3_LPM4_VCORE1 | Transition from AM_LDO_VCORE1 to LPM3 or LPM4 at VCORE1 | SELM = 3. DCO frequency = 48 MHz | 21 | 23 | µs |
| $t_{LPMx1_AMLDO1_NORIO}$ (2) | LPM3_LPM4_VCORE1 | AM_LDO_VCORE1 | Transition from LPM3 or LPM4 at VCORE1 to AM_LDO_VCORE1 through wake-up event from non-glitch filter type I/O | SELM = 3. DCO frequency = 48 MHz | 7.5 | 8 | µs |
| $t_{LPMx1_AMLDO1_GFLTIO}$ (2) | LPM3_LPM4_VCORE1 | AM_LDO_VCORE1 | Transition from LPM3 or LPM4 at VCORE1 to AM_LDO_VCORE1 through wake-up event from glitch filter type I/O, GLTFLT_EN = 1 | SELM = 3. DCO frequency = 48 MHz | 8 | 9 | µs |
| $t_{AMLFx_LPMx_128k}$ (1) | AM_LF_VCOREx | LPM3_LPM4_VCOREx | Transition from AM_LF_VCORE0/1 to LPM3 or LPM4 at VCORE0/1 | SELM = 2. REFO frequency = 128 kHz | 240 | 260 | µs |
| $t_{AMLFx_LPMx_32k}$ (1) | AM_LF_VCOREx | LPM3_LPM4_VCOREx | Transition from AM_LF_VCORE0/1 to LPM3 or LPM4 at VCORE0/1 | SELM = 0. LFXT frequency = 32.768 kHz | 880 | 900 | µs |
| $t_{LPMx_AMLFx_NORIO_128k}$ (2) | LPM3_LPM4_VCOREx | AM_LF_VCOREx | Transition from LPM3 or LPM4 at VCORE0/1 to AM_LF_VCORE0/1 through wake-up event from non-glitch filter type I/O | SELM = 2. REFO frequency = 128 kHz | 45 | 50 | µs |
| $t_{LPMx_AMLFx_NORIO_32k}$ (2) | LPM3_LPM4_VCOREx | AM_LF_VCOREx | Transition from LPM3 or LPM4 at VCORE0/1 to AM_LF_VCORE0/1 through wake-up event from non-glitch filter type I/O | SELM = 0. LFXT frequency = 32.768 kHz | 150 | 170 | µs |

(1) This is the latency from WFI instruction execution by CPU to LPM3 or LPM4 entry.
(2) This is the latency from I/O wake-up event to MCLK clock start at device pin.


Copyright © 2015–2016, Texas Instruments Incorporated

Table 5-6 lists the latencies required to change to and from LPM3.5 and LPM4.5 modes.

**Table 5-6. LPM3.5, LPM4.5 Mode Transition Latencies**

over recommended ranges of supply voltage and operating free-air temperature (unless otherwise noted)

| PARAMETER | ORIGINAL OPERATING MODE | FINAL OPERATING MODE | TEST CONDITIONS | TYP | MAX | UNIT |
|---|---|---|---|---|---|---|
| $t_{AMLDOx_LPM3.5}$ (1) | AM_LDO_VCOREx | LPM3.5 | Transition from AM_LDO_VCORE0/1 to LPM3.5 | 25 | 30 | µs |
| $t_{AMDCDCx_LPM3.5}$ (1) | AM_DCDC_VCOREx | LPM3.5 | Transition from AM_DCDC_VCORE0/1 to LPM3.5 | 35 | 50 | µs |
| $t_{AMLFx_LPM3.5}$ (1) | AM_LF_VCOREx | LPM3.5 | Transition from AM_LF_VCORE0/1 to LPM3.5 | 225 | 250 | µs |
| $t_{AMLDOx_LPM4.5}$ (2) | AM_LDO_VCOREx | LPM4.5 | Transition from AM_LDO_VCORE0/1 to LPM4.5 | 25 | 30 | µs |
| $t_{AMDCDCx_LPM4.5}$ (2) | AM_DCDC_VCOREx | LPM4.5 | Transition from AM_DCDC_VCORE0/1 to LPM4.5 | 35 | 50 | µs |
| $t_{AMLFx_LPM4.5}$ (2) | AM_LF_VCOREx | LPM4.5 | Transition from AM_LF_VCORE0/1 to LPM4.5 | 250 | 270 | µs |
| $t_{LPM3.5_AMLDO0}$ (3) | LPM3.5 | AM_LDO_VCORE0 | Transition from LPM3.5 to AM_LDO_VCORE0 | 0.7 | 0.8 | ms |
| $t_{LPM4.5_AMLDO0_SVSMON,\ 100\ nF}$ (3) | LPM4.5 | AM_LDO_VCORE0 | Transition from LPM4.5 to AM_LDO_VCORE0, SVSMH enabled while in LPM4.5, $C_{VCORE}$ = 100 nF | 0.8 | 0.9 | ms |
| $t_{LPM4.5_AMLDO0_SVSMON,\ 4.7\ \mu F}$ (3) | LPM4.5 | AM_LDO_VCORE0 | Transition from LPM4.5 to AM_LDO_VCORE0, SVSMH enabled while in LPM4.5, $C_{VCORE}$ = 4.7 µF | 0.9 | 1 | ms |
| $t_{LPM4.5_AMLDO0_SVSMOFF,\ 100\ nF}$ (3) | LPM4.5 | AM_LDO_VCORE0 | Transition from LPM4.5 to AM_LDO_VCORE0, SVSMH disabled while in LPM4.5, $C_{VCORE}$ = 100 nF | 1 | 1.1 | ms |
| $t_{LPM4.5_AMLDO0_SVSMOFF,\ 4.7\ \mu F}$ (3) | LPM4.5 | AM_LDO_VCORE0 | Transition from LPM4.5 to AM_LDO_VCORE0, SVSMH disabled while in LPM4.5, $C_{VCORE}$ = 4.7 µF | 1.1 | 1.2 | ms |

(1) This is the latency from WFI instruction execution by CPU to LPM3.5 mode entry.
(2) This is the latency from WFI instruction execution by CPU to LPM4.5 mode entry.
(3) This is the latency from I/O wake-up event to start of user application code.

### 5.24.3 Clock Specifications

Table 5-7 lists the input requirement for the low-frequency crystal oscillator, LFXT.

**Table 5-7. Low-Frequency Crystal Oscillator, LFXT, Recommended Operating Conditions**

over operating free-air temperature range (unless otherwise noted)

| PARAMETER | | TEST CONDITIONS | MIN | TYP | MAX | UNIT |
|---|---|---|---|---|---|---|
| ESR | Crystal equivalent series resistance | $f_{OSC}$ = 32.768 kHz | 16 | 40 | 65 | kΩ |
| $C_{LFXT}$ | Capacitance from LFXT input to ground and from LFXT output to ground (1) | | 7.4 | 12 | 24 | pF |
| $C_{SHUNT}$ | Crystal shunt capacitance | | 0.6 | 0.8 | 1.6 | pF |
| $C_m$ | Crystal motional capacitance | | 1 | 2 | 10 | fF |

(1) Does not include board parasitics. Package and board add additional capacitance to $C_{LFXT}$.

Table 5-8 lists the characteristics of the low-frequency crystal oscillator, LFXT.

**Table 5-8. Low-Frequency Crystal Oscillator, LFXT**

over recommended ranges of supply voltage and operating free-air temperature (unless otherwise noted)

| PARAMETER | | TEST CONDITIONS | $V_{CC}$ | MIN | TYP | MAX | UNIT |
|---|---|---|---|---|---|---|---|
| $I_{VCC,LFXT}$ | Current consumption (1) | $f_{OSC}$ = 32.768 kHz, LFXTBYPASS = 0, LFXTDRIVE = {0}, $C_{L,eff}$ = 3.7 pF Typical ESR, $C_{SHUNT}$ | 3.0 V | | 100 | | nA |
| | | $f_{OSC}$ = 32.768 kHz, LFXTBYPASS = 0, LFXTDRIVE = {1}, $C_{L,eff}$ = 6 pF, Typical ESR, $C_{SHUNT}$ | | | 120 | | |
| | | $f_{OSC}$ = 32.768 kHz, LFXTBYPASS = 0, LFXTDRIVE = {2}, $C_{L,eff}$ = 9 pF, Typical ESR, $C_{SHUNT}$ | | | 150 | | |
| | | $f_{OSC}$ = 32.768 kHz, LFXTBYPASS = 0, LFXTDRIVE = {3}, $C_{L,eff}$ = 12 pF, Typical ESR, $C_{SHUNT}$ | | | 170 | | |
| $f_{LFXT}$ | LFXT oscillator crystal frequency | LFXTBYPASS = 0 (2) | | | 32.768 | | kHz |
| $DC_{LFXT}$ | LFXT oscillator duty cycle | $f_{LFXT}$ = 32.768 kHz (2) | | 30% | | 70% | |
| $f_{LFXT,SW}$ | LFXT oscillator logic-level square-wave input frequency | LFXTBYPASS = 1 (3) (4) | | 10 | 32.768 | 50 | kHz |
| $DC_{LFXT,SW}$ | LFXT oscillator logic-level square-wave input duty cycle | LFXTBYPASS = 1 | | 30% | | 70% | |
| $OA_{LFXT}$ | Oscillation allowance for LF crystals (5) | LFXTBYPASS = 0, LFXTDRIVE = {1}, $f_{LFXT}$ = 32.768 kHz, $C_{L,eff}$ = 6 pF | | 200 | 240 | | kΩ |
| | | LFXTBYPASS = 0, LFXTDRIVE = {3}, $f_{LFXT}$ = 32.768 kHz, $C_{L,eff}$ = 12 pF | | 300 | 340 | | |

(1) Total current measured on both AVCC and DVCC supplies.
(2) Measured at ACLK pin.
(3) When LFXTBYPASS is set, LFXT circuits are automatically powered down. Input signal is a digital square wave with parametrics defined in the Schmitt-trigger Inputs section of this data sheet. Duty cycle requirements are defined by $DC_{LFXT, SW}$.
(4) Maximum frequency of operation of the entire device cannot be exceeded.
(5) Oscillation allowance is based on a safety factor of 5 for recommended crystals. The oscillation allowance is a function of the LFXTDRIVE settings and the effective load. In general, comparable oscillator allowance can be achieved based on the following guidelines, but should be evaluated based on the actual crystal selected for the application:
- For LFXTDRIVE = {0}, $C_{L,eff}$ = 3.7 pF.
- For LFXTDRIVE = {1}, 6 pF ≤ $C_{L,eff}$ ≤ 9 pF.
- For LFXTDRIVE = {2}, 6 pF ≤ $C_{L,eff}$ ≤ 10 pF.
- For LFXTDRIVE = {3}, 6 pF ≤ $C_{L,eff}$ ≤ 12 pF.


Copyright © 2015–2016, Texas Instruments Incorporated

## Low-Frequency Crystal Oscillator, LFXT *(continued)*

over recommended ranges of supply voltage and operating free-air temperature (unless otherwise noted)

| PARAMETER | | TEST CONDITIONS | $V_{CC}$ | MIN | TYP | MAX | UNIT |
|---|---|---|---|---|---|---|---|
| $C_{LFXIN}$ | Integrated load capacitance at LFXIN terminal(6) (7) | | | | 2 | | pF |
| $C_{LFXOUT}$ | Integrated load capacitance at LFXOUT terminal(6) (7) | | | | 2 | | pF |
| $t_{START,LFXT}$ | Start-up time(8) | $f_{OSC}$ = 32.768 kHz, LFXTBYPASS = 0, LFXTDRIVE = {0}, $C_{L,eff}$ = 3.7 pF, Typical ESR, $C_{SHUNT}$, FCNTLF_EN = 0(2) | 3.0 V | | 1.1 | | s |
| | | $f_{OSC}$ = 32.768 kHz, LFXTBYPASS = 0, LFXTDRIVE = {3}, $C_{L,eff}$ = 12 pF, Typical ESR, $C_{SHUNT}$, FCNTLF_EN = 0(2) | | | 1.3 | | |
| $f_{Fault,LFXT}$ | Oscillator fault frequency(9) (10) | | | 1 | | 3 | kHz |

(6) This represents all the parasitic capacitance present at the LFXIN and LFXOUT terminals, respectively, including parasitic bond and package capacitance. The effective load capacitance, CL,eff can be computed as CIN x COUT / (CIN + COUT), where CIN and COUT are the total capacitance at the LFXIN and LFXOUT terminals, respectively.
(7) Requires external capacitors at both terminals to meet the effective load capacitance specified by crystal manufacturers. Recommended effective load capacitance values supported are 3.7 pF, 6 pF, 9 pF, and 12 pF. Maximum shunt capacitance of 1.6 pF. Because the PCB adds additional capacitance, so it must also be considered in the overall capacitance. TI recommends verifying that the recommended effective load capacitance of the selected crystal is met.
(8) Does not include programmable start-up counter.
(9) Frequencies above the MAX specification do not set the fault flag. Frequencies in between the MIN and MAX specification may set the flag. A static condition or stuck at fault condition will set the fault flag.
(10) Measured with logic-level input frequency but also applies to operation with crystals.

Table 5-9 lists the input requirements for the high-frequency crystal oscillator, HFXT.

### Table 5-9. High-Frequency Crystal Oscillator, HFXT, Recommended Operating Conditions

over operating free-air temperature range (unless otherwise noted)

| PARAMETER | | TEST CONDITIONS | MIN | TYP | MAX | UNIT |
|---|---|---|---|---|---|---|
| ESR | Crystal equivalent series resistance | $f_{OSC}$ = 1 MHz to ≤ 4 MHz | | 75 | 150 | Ω |
| | | $f_{OSC}$ = > 4 MHz to ≤ 8 MHz | | 75 | 150 | |
| | | $f_{OSC}$ = > 8 MHz to ≤ 16 MHz | | 40 | 80 | |
| | | $f_{OSC}$ = > 16 MHz to ≤ 24 MHz | | 30 | 60 | |
| | | $f_{OSC}$ = > 24 MHz to ≤ 32 MHz | | 20 | 40 | |
| | | $f_{OSC}$ = > 32 MHz to ≤ 48 MHz | | 15 | 30 | |
| $C_{HFXT}$ | Capacitance from HFXT input to ground and from HFXT output to ground | $f_{OSC}$ = 1 MHz to 48 MHz | 28 | 32 | 36 | pF |
| $C_{SHUNT}$ | Crystal shunt capacitance | $f_{OSC}$ = 1 MHz to 48 MHz | 1 | 3 | 7 | pF |
| $C_m$ | Crystal motional capacitance | $f_{OSC}$ = 1 MHz to 48 MHz | 3 | 7 | 30 | fF |

Copyright © 2015–2016, Texas Instruments Incorporated

Table 5-10 lists the characteristics of the high-frequency crystal oscillator, HFXT.

**Table 5-10. High-Frequency Crystal Oscillator, HFXT**

over recommended ranges of supply voltage and operating free-air temperature (unless otherwise noted)

| PARAMETER | | TEST CONDITIONS | $V_{CC}$ | MIN | TYP | MAX | UNIT |
|---|---|---|---|---|---|---|---|
| $I_{DVCC,HFXT}$ | HFXT oscillator crystal current HF mode at typical ESR | $f_{OSC}$ = 1 MHz, HFXTBYPASS = 0, HFXTDRIVE = 0, HFFREQ = 0, $C_{L,eff}$ = 16 pF, Typical ESR , $C_{SHUNT}$ | 3.0 V | | 40 | | µA |
| | | $f_{OSC}$ = 4 MHz, HFXTBYPASS = 0, HFXTDRIVE = 1, HFFREQ = 0, $C_{L,eff}$ = 16 pF, Typical ESR , $C_{SHUNT}$ | | | 60 | | |
| | | $f_{OSC}$ = 8 MHz, HFXTBYPASS = 0, HFXTDRIVE = 1, HFFREQ = 1, $C_{L,eff}$ = 16 pF, Typical ESR , $C_{SHUNT}$ | | | 100 | | |
| | | $f_{OSC}$ = 16 MHz, HFXTBYPASS = 0, HFXTDRIVE = 1, HFFREQ = 2, $C_{L,eff}$ = 16 pF, Typical ESR , $C_{SHUNT}$ | | | 180 | | |
| | | $f_{OSC}$ = 24 MHz, HFXTBYPASS = 0, HFXTDRIVE = 1, HFFREQ = 3, $C_{L,eff}$ = 16 pF, Typical ESR , $C_{SHUNT}$ | | | 260 | | |
| | | $f_{OSC}$ = 32 MHz, HFXTBYPASS = 0, HFXTDRIVE = 1, HFFREQ = 4, $C_{L,eff}$ = 16 pF, Typical ESR , $C_{SHUNT}$ | | | 320 | | |
| | | $f_{OSC}$ = 40 MHz, HFXTBYPASS = 0, HFXTDRIVE = 1, HFFREQ = 5, $C_{L,eff}$ = 16 pF, Typical ESR , $C_{SHUNT}$ | | | 480 | | |
| | | $f_{OSC}$ = 48 MHz, HFXTBYPASS = 0, HFXTDRIVE = 1, HFFREQ = 6, $C_{L,eff}$ = 16 pF, Typical ESR , $C_{SHUNT}$ | | | 550 | | |
| $f_{HFXT}$ | HFXT oscillator crystal frequency, crystal mode | HFXTBYPASS = 0, HFFREQ = 0 (1) | | 1 | | 4 | MHz |
| | | HFXTBYPASS = 0, HFFREQ = 1 (1) | | 4.01 | | 8 | |
| | | HFXTBYPASS = 0, HFFREQ = 2 (1) | | 8.01 | | 16 | |
| | | HFXTBYPASS = 0, HFFREQ = 3 (1) | | 16.01 | | 24 | |
| | | HFXTBYPASS = 0, HFFREQ = 4 (1) | | 24.01 | | 32 | |
| | | HFXTBYPASS = 0, HFFREQ = 5 (1) | | 32.01 | | 40 | |
| | | HFXTBYPASS = 0, HFFREQ = 6 (1) | | 40.01 | | 48 | |
| $DC_{HFXT}$ | HFXT oscillator duty cycle | Measured at MCLK or HSMCLK, $f_{HFXT}$ = 1 MHz to 48 MHz | | 40% | 50% | 60% | |
| $f_{HFXT,SW}$ | HFXT oscillator logic-level square-wave input frequency, bypass mode | HFXTBYPASS = 1 (1)(2) | | 0.8 | | 48 | MHz |
| $DC_{HFXT, SW}$ | HFXT oscillator logic-level square-wave input duty cycle | HFXTBYPASS = 1, External clock used as a direct source to MCLK or HSMCLK with no divider (DIVM = 0 or DIVHS = 0). | | 45% | | 55% | |
| | | HFXTBYPASS = 1, External clock used as a direct source to MCLK or HSMCLK with divider (DIVM > 0 or DIVHS > 0) or not used as a direct source to MCLK or HSMCLK. | | 40% | | 60% | |

(1) Maximum frequency of operation of the entire device cannot be exceeded.
(2) When HFXTBYPASS is set, HFXT circuits are automatically powered down. Input signal is a digital square wave with parametrics defined in the Schmitt-trigger Inputs section of this data sheet. Duty cycle requirements are defined by $DC_{HFXT, SW}$.


Copyright © 2015–2016, Texas Instruments Incorporated

## High-Frequency Crystal Oscillator, HFXT *(continued)*

over recommended ranges of supply voltage and operating free-air temperature (unless otherwise noted)

| PARAMETER | | TEST CONDITIONS | $V_{CC}$ | MIN | TYP | MAX | UNIT |
|---|---|---|---|---|---|---|---|
| $OA_{HFXT}$ | Oscillation allowance for HFXT crystals[3] | HFXTBYPASS = 0, HFXTDRIVE = 0, HFFREQ = 0, $f_{HFXT,HF}$ = 1 MHz, $C_{L,eff}$ = 16 pF | | 1225 | 5000 | | Ω |
| | | HFXTBYPASS = 0, HFXTDRIVE = 1, HFFREQ = 0, $f_{HFXT,HF}$ = 4 MHz, $C_{L,eff}$ = 16 pF | | 640 | 1250 | | |
| | | HFXTBYPASS = 0, HFXTDRIVE = 1, HFFREQ = 1, $f_{HFXT,HF}$ = 8 MHz, $C_{L,eff}$ = 16 pF | | 360 | 750 | | |
| | | HFXTBYPASS = 0, HFXTDRIVE = 1, HFFREQ = 2, $f_{HFXT,HF}$ = 16 MHz, $C_{L,eff}$ = 16 pF | | 200 | 425 | | |
| | | HFXTBYPASS = 0, HFXTDRIVE = 1, HFFREQ = 3, $f_{HFXT,HF}$ = 24 MHz, $C_{L,eff}$ = 16 pF | | 135 | 275 | | |
| | | HFXTBYPASS = 0, HFXTDRIVE = 1, HFFREQ = 4, $f_{HFXT,HF}$ = 32 MHz, $C_{L,eff}$ = 16 pF | | 110 | 225 | | |
| | | HFXTBYPASS = 0, HFXTDRIVE = 1, HFFREQ = 5 $f_{HFXT,HF}$ = 40 MHz, $C_{L,eff}$ = 16 pF | | 105 | 160 | | |
| | | HFXTBYPASS = 0, HFXTDRIVE = 1, HFFREQ = 6, $f_{HFXT,HF}$ = 48 MHz, $C_{L,eff}$ = 16 pF | | 80 | 140 | | |

(3) Oscillation allowance is based on a safety factor of 5 for recommended crystals.

Copyright © 2015–2016, Texas Instruments Incorporated

## High-Frequency Crystal Oscillator, HFXT *(continued)*

over recommended ranges of supply voltage and operating free-air temperature (unless otherwise noted)

| PARAMETER | | TEST CONDITIONS | $V_{CC}$ | MIN | TYP | MAX | UNIT |
|---|---|---|---|---|---|---|---|
| $t_{START,HFXT}$ | Start-up time (4) | $f_{OSC}$ = 1 MHz, HFXTBYPASS = 0, HFXTDRIVE = 0, HFFREQ = 0, $C_{L,eff}$ = 16 pF, Typical ESR , $C_{SHUNT}$ FCNTHF_EN = 0 | 3.0 V | | 4 | | ms |
| | | $f_{OSC}$ = 4 MHz, HFXTBYPASS = 0, HFXTDRIVE = 1, HFFREQ = 0, $C_{L,eff}$ = 16 pF, Typical ESR , $C_{SHUNT}$ FCNTHF_EN = 0 | | | 1.8 | | |
| | | $f_{OSC}$ = 8 MHz, HFXTBYPASS = 0, HFXTDRIVE = 1, HFFREQ = 1, $C_{L,eff}$ = 16 pF, Typical ESR , $C_{SHUNT}$ FCNTHF_EN = 0 | | | 0.7 | | |
| | | $f_{OSC}$ = 16 MHz, HFXTBYPASS = 0, HFXTDRIVE = 1, HFFREQ = 2, $C_{L,eff}$ = 16 pF, Typical ESR , $C_{SHUNT}$ FCNTHF_EN = 0 | | | 0.6 | | |
| | | $f_{OSC}$ = 24 MHz, HFXTBYPASS = 0, HFXTDRIVE = 1, HFFREQ = 3, $C_{L,eff}$ = 16 pF, Typical ESR , $C_{SHUNT}$ FCNTHF_EN = 0 | | | 450 | | µs |
| | | $f_{OSC}$ = 32 MHz, HFXTBYPASS = 0, HFXTDRIVE = 1, HFFREQ = 4, $C_{L,eff}$ = 16 pF, Typical ESR , $C_{SHUNT}$ FCNTHF_EN = 0 | | | 300 | | |
| | | $f_{OSC}$ = 40 MHz, HFXTBYPASS = 0, HFXTDRIVE = 1, HFFREQ = 5, $C_{L,eff}$ = 16 pF, Typical ESR , $C_{SHUNT}$ FCNTHF_EN = 0 | | | 250 | | |
| | | $f_{OSC}$ = 48 MHz, HFXTBYPASS = 0, HFXTDRIVE = 1, HFFREQ = 6, $C_{L,eff}$ = 16 pF, Typical ESR , $C_{SHUNT}$ FCNTHF_EN = 0 | | | 250 | | |
| $C_{HFXIN}$ | Integrated load capacitance at HFXIN terminal (5) (6) | | | | 2 | | pF |
| $C_{HFXOUT}$ | Integrated load capacitance at HFXOUT terminal (5) (6) | | | | 2 | | pF |
| $f_{Fault,HFXT}$ | Oscillator fault frequency (7) (8) | | | 400 | | 700 | kHz |

(4) Does not include programable start-up counter.
(5) This represents all the parasitic capacitance present at the HFXIN and HFXOUT terminals, respectively, including parasitic bond and package capacitance. The effective load capacitance, CL,eff can be computed as CIN x COUT / (CIN + COUT), where CIN and COUT is the total capacitance at the HFXIN and HFXOUT terminals, respectively.
(6) Requires external capacitors at both terminals to meet the effective load capacitance specified by crystal manufacturers. Recommended effective load capacitance values supported are 14 pF, 16 pF, and 18 pF. Maximum shunt capacitance of 7 pF. The PCB adds additional capacitance, so it must also be considered in the overall capacitance. TI recommends verifying that the recommended effective load capacitance of the selected crystal is met.
(7) Frequencies above the MAX specification do not set the fault flag. Frequencies in between the MIN and MAX might set the flag. A static condition or stuck at fault condition will set the flag.
(8) Measured with logic-level input frequency but also applies to operation with crystals.


Copyright © 2015–2016, Texas Instruments Incorporated

Table 5-11 lists the characteristics of the DCO.

**Table 5-11. DCO**

over recommended ranges of supply voltage and operating free-air temperature (unless otherwise noted)

| PARAMETER | | TEST CONDITIONS | $V_{CC}$, $T_A$ | MIN | TYP | MAX | UNIT |
|---|---|---|---|---|---|---|---|
| $f_{RSEL0_CTR}$ | DCO center frequency accuracy for range 0 with calibrated factory settings | Internal resistor mode, DCORSEL = 0, DCOTUNE = 0 | | 1.443 | 1.5 | 1.557 | MHz |
| | | External resistor mode, DCORSEL = 0, DCOTUNE = 0 | | 1.482 | 1.5 | 1.518 | |
| $f_{RSEL1_CTR}$ | DCO center frequency accuracy for range 1 with calibrated factory settings | Internal resistor mode, DCORSEL = 1, DCOTUNE = 0 | | 2.885 | 3 | 3.115 | MHz |
| | | External resistor mode, DCORSEL = 1, DCOTUNE = 0 | | 2.964 | 3 | 3.036 | |
| $f_{RSEL2_CTR}$ | DCO center frequency accuracy for range 2 with calibrated factory settings | Internal resistor mode, DCORSEL = 2, DCOTUNE = 0 | | 5.77 | 6 | 6.23 | MHz |
| | | External resistor mode, DCORSEL = 2, DCOTUNE = 0 | | 5.928 | 6 | 6.072 | |
| $f_{RSEL3_CTR}$ | DCO center frequency accuracy for range 3 with calibrated factory settings | Internal resistor mode, DCORSEL = 3, DCOTUNE = 0 | | 11.541 | 12 | 12.459 | MHz |
| | | External resistor mode, DCORSEL = 3, DCOTUNE = 0 | | 11.856 | 12 | 12.144 | |
| $f_{RSEL4_CTR}$ | DCO center frequency accuracy for range 4 with calibrated factory settings | Internal resistor mode, DCORSEL = 4, DCOTUNE = 0 | | 23.082 | 24 | 24.918 | MHz |
| | | External resistor mode, DCORSEL = 4, DCOTUNE = 0 | | 23.712 | 24 | 24.288 | |
| $f_{RSEL5_CTR}$ | DCO center frequency accuracy for range 5 with calibrated factory settings | Internal resistor mode, DCORSEL = 5, DCOTUNE = 0 | | 46.164 | 48 | 49.836 | MHz |
| | | External resistor mode, DCORSEL = 5, DCOTUNE = 0 | | 47.424 | 48 | 48.576 | |
| $df_{DCO}/dT$ | DCO frequency drift with temperature (1) | Internal resistor mode, At fixed voltage | 1.62 V to 3.7 V | | | 250 | ppm/°C |
| | | External resistor mode (2) At fixed voltage | 1.62 V to 3.7 V | | | 40 | |
| $df_{DCO}/dV_{CC}$ | DCO frequency voltage drift with voltage (3) | At fixed temperature, applicable for both DCO Internal and External resistor modes | –40°C to 85 °C | | | 0.1 | %/V |
| $f_{RSEL0}$ | DCO frequency range 0 | DCORSEL = 0 DCO internal or external resistor mode | 3.0 V, 25℃ | 0.98 | | 2.26 | MHz |
| $f_{RSEL1}$ | DCO frequency range 1 | DCORSEL = 1 DCO internal or external resistor mode | 3.0 V, 25℃ | 1.96 | | 4.51 | MHz |
| $f_{RSEL2}$ | DCO frequency range 2 | DCORSEL = 2 DCO internal or external resistor mode | 3.0 V, 25℃ | 3.92 | | 9.02 | MHz |
| $f_{RSEL3}$ | DCO frequency range 3 | DCORSEL = 3 DCO internal or external resistor mode | 3.0 V, 25℃ | 7.84 | | 18.04 | MHz |
| $f_{RSEL4}$ | DCO frequency range 4 | DCORSEL = 4 DCO internal or external resistor mode | 3.0 V, 25℃ | 15.68 | | 36.07 | MHz |
| $f_{RSEL5}$ | DCO frequency range 5 | DCORSEL = 5 DCO internal or external resistor mode | 3.0 V, 25℃ | 31.36 | | 52 | MHz |
| $f_{DCO_DC}$ | Duty cycle | | | 47% | 50% | 53% | |

(1) Calculated using the box method: (MAX(–40°C to 85°C) – MIN(–40°C to 85°C)) / MIN(–40°C to 85°C) / (85°C – (–40°C))
(2) Does not include temperature coefficient of external resistor.
The recommended value of external resistor at DCOR pin: 91 kΩ, 0.1%, ±25 ppm/℃.
(3) Calculated using the box method: (MAX(1.62 V to 3.7 V) – MIN(1.62 V to 3.7 V)) / MIN(1.62 V to 3.7 V) / (3.7 V – 1.62 V)

Copyright © 2015–2016, Texas Instruments Incorporated

## DCO *(continued)*

over recommended ranges of supply voltage and operating free-air temperature (unless otherwise noted)

| PARAMETER | | TEST CONDITIONS | $V_{CC}$, $T_A$ | MIN | TYP | MAX | UNIT |
|---|---|---|---|---|---|---|---|
| $t_{DCO_JITTER}$ | DCO period jitter | DCORSEL = 5, DCOTUNE = 0 | | | 50 | 90 | ps |
| | | DCORSEL = 4, DCOTUNE = 0 | | | 80 | 120 | |
| | | DCORSEL = 3, DCOTUNE = 0 | | | 115 | 170 | |
| | | DCORSEL = 2, DCOTUNE = 0 | | | 160 | 240 | |
| | | DCORSEL = 1, DCOTUNE = 0 | | | 225 | 340 | |
| | | DCORSEL = 0, DCOTUNE = 0 | | | 450 | 550 | |
| $T_{DCO_STEP}$ | Step size | Step size of the DCO. | | | 0.2% | | |
| $t_{DCO_SETTLE_RANGE}$ | DCO settling from worst case DCORSELn to DCORSELm | DCO settled to within 1.5% of steady state frequency | | | | 10 | µs |
| $t_{DCO_SETTLE_TUNE}$ | DCO settling worst case DCOTUNEn to DCOTUNEm within any DCORSEL setting | DCO settled to within 1.5% of steady state frequency | | | | 10 | µs |
| $t_{START}$ | DCO start-up time (4) | DCO settled to within 0.5% of steady state frequency | | | 5 | | µs |

(4) The maximum parasitic capacitance at the DCO external resistance pin (DCOR) should not exceed 5 pF to ensure the specified DCO start-up time.

Table 5-12 lists the overall tolerance of the DCO.

### Table 5-12. DCO Overall Tolerance

over operating free-air temperature range (unless otherwise noted)

| RESISTOR OPTION | TEMPERATURE CHANGE | TEMPERATURE DRIFT (%) | VOLTAGE CHANGE | VOLTAGE DRIFT (%) | OVERALL DRIFT (%) | OVERALL ACCURACY (%) |
|---|---|---|---|---|---|---|
| Internal resistor | –40°C to 85 °C | ±3.125 | 1.62 V to 3.7 V | ±0.2 | ±3.325 | ±3.825 |
| | 0°C | 0 | 1.62 V to 3.7 V | ±0.2 | ±0.2 | ±0.7 |
| | –40°C to 85 °C | ±3.125 | 0 V | 0 | ±3.125 | ±3.625 |
| External resistor with 25-ppm TCR | –40°C to 85 °C | ±0.5 | 1.62 V to 3.7 V | ±0.2 | ±0.7 | ±1.2 |
| | 0°C | 0 | 1.62 V to 3.7 V | ±0.2 | ±0.2 | ±0.7 |
| | –40°C to 85 °C | ±0.5 | 0 V | 0 | ±0.5 | ±1 |


Copyright © 2015–2016, Texas Instruments Incorporated

Table 5-13 lists the characteristics of the internal very-low-power low-frequency oscillator (VLO).

**Table 5-13. Internal Very-Low-Power Low-Frequency Oscillator (VLO)**

over recommended ranges of supply voltage and operating free-air temperature (unless otherwise noted)

| PARAMETER | | TEST CONDITIONS | MIN | TYP | MAX | UNIT |
|---|---|---|---|---|---|---|
| $I_{VLO}$ | Current consumption (1) | | | 50 | | nA |
| $f_{VLO}$ | VLO frequency | | 6 | 9.4 | 14 | kHz |
| $df_{VLO}/d_T$ | VLO frequency temperature drift (2) | | | 0.1 | | %/°C |
| $df_{VLO}/dV_{CC}$ | VLO frequency supply voltage drift (3) | | | 0.2 | | %/V |
| $DC_{VLO}$ | Duty cycle | | 40% | 50% | 60% | |

(1) Current measured on DVCC supply
(2) Calculated using the box method: (MAX(–40°C to 85°C) – MIN(–40°C to 85°C)) / MIN(–40°C to 85°C) / (85°C – (–40°C))
(3) Calculated using the box method: (MAX(1.62 V to 3.7 V) – MIN(1.62 V to 3.7 V)) / MIN(1.62 V to 3.7 V) / (3.7 V – 1.62 V)

Table 5-14 lists the characteristics of the internal-reference low-frequency oscillator (REFO) in 32.768-kHz mode.

**Table 5-14. Internal-Reference Low-Frequency Oscillator (REFO) – 32.768-kHz Mode (1)**

over recommended ranges of supply voltage and operating free-air temperature (unless otherwise noted)

| PARAMETER | | TEST CONDITIONS | $V_{CC}$ | MIN | TYP | MAX | UNIT |
|---|---|---|---|---|---|---|---|
| $I_{REFO}$ | REFO current consumption (2) | | | | 0.6 | | µA |
| $f_{REFO}$ | REFO frequency calibrated | | | | 32.768 | | kHz |
| | REFO absolute tolerance calibrated | $T_A$ = –40°C to 85°C | | | | ±3% | |
| | | $T_A$ = 25°C | 3 V | | | ±1.5% | |
| $df_{REFO}/d_T$ | REFO frequency temperature drift (3) | | | | 0.012 | | %/°C |
| $df_{REFO}/dV_{CC}$ | REFO frequency supply voltage drift (4) | | | | 0.2 | | %/V |
| $DC_{REFO}$ | REFO duty cycle | | | 40% | 50% | 60% | |

(1) REFO is configured to 32.768-kHz mode with REFOFSEL = 0.
(2) Total current measured on both AVCC and DVCC supplies.
(3) Calculated using the box method: (MAX(–40°C to 85°C) – MIN(–40°C to 85°C)) / MIN(–40°C to 85°C) / (85°C – (–40°C))
(4) Calculated using the box method: (MAX(1.62 V to 3.7 V) – MIN(1.62 V to 3.7 V)) / MIN(1.62 V to 3.7 V) / (3.7 V – 1.62 V)

Table 5-15 lists the characteristics of the internal-reference low-frequency oscillator (REFO) in 128-kHz mode.

**Table 5-15. Internal-Reference Low-Frequency Oscillator (REFO) – 128-kHz Mode (1)**

over recommended ranges of supply voltage and operating free-air temperature (unless otherwise noted)

| PARAMETER | | TEST CONDITIONS | $V_{CC}$ | MIN | TYP | MAX | UNIT |
|---|---|---|---|---|---|---|---|
| REFO | REFO current consumption (2) | | | | 1 | | µA |
| $f_{REFO}$ | REFO frequency calibrated | | | | 128 | | kHz |
| | REFO absolute tolerance calibrated | $T_A$ = –40°C to 85°C | | | | ±6% | |
| | | $T_A$ = 25°C | 3 V | | | ±1.5% | |
| $df_{REFO}/d_T$ | REFO frequency temperature drift (3) | | | | 0.018 | | %/°C |
| $df_{REFO}/dV_{CC}$ | REFO frequency supply voltage drift (4) | | | | 0.4 | | %/V |
| $DC_{REFO}$ | REFO duty cycle | | | 40% | 50% | 60% | |

(1) REFO is configured to 128-kHz mode with REFOFSEL = 1.
(2) Total current measured on both AVCC and DVCC supplies.
(3) Calculated using the box method: (MAX(–40°C to 85°C) – MIN(–40°C to 85°C)) / MIN(–40°C to 85°C) / (85°C – (–40°C))
(4) Calculated using the box method: (MAX(1.62 V to 3.7 V) – MIN(1.62 V to 3.7 V)) / MIN(1.62 V to 3.7 V) / (3.7 V – 1.62 V)

Copyright © 2015–2016, Texas Instruments Incorporated

Table 5-16 lists the characteristics of the module oscillator (MODOSC).

### Table 5-16. Module Oscillator (MODOSC)

over recommended ranges of supply voltage and operating free-air temperature (unless otherwise noted)

| PARAMETER | | TEST CONDITIONS | $V_{CC}$ | MIN | TYP | MAX | UNIT |
|---|---|---|---|---|---|---|---|
| $I_{MODOSC}$ | Current consumption (1) | | | | 50 | | µA |
| $f_{MODOSC}$ | MODOSC frequency | | | 23 | 25 | 27 | MHz |
| $df_{MODOSC}/dT$ | MODOSC frequency temperature drift (2) | | | | 0.02 | | %/°C |
| $df_{MODOSC}/dV_{CC}$ | MODOSC frequency supply voltage drift (3) | | | | 0.3 | | %/V |
| $DC_{MODOSC}$ | Duty cycle | | | 40% | 50% | 60% | |

(1) Total current measured on both AVCC and DVCC supplies.
(2) Calculated using the box method: (MAX(–40°C to 85°C) – MIN(–40°C to 85°C)) / MIN(–40°C to 85°C) / (85°C – (–40°C))
(3) Calculated using the box method: (MAX(1.62 V to 3.7 V) – MIN(1.62 V to 3.7 V)) / MIN(1.62 V to 3.7 V) / (3.7 V – 1.62 V)

Table 5-17 lists the characteristics of the system oscillator (SYSOSC).

### Table 5-17. System Oscillator (SYSOSC)

over recommended ranges of supply voltage and operating free-air temperature (unless otherwise noted)

| PARAMETER | | TEST CONDITIONS | $V_{CC}$ | MIN | TYP | MAX | UNIT |
|---|---|---|---|---|---|---|---|
| $I_{SYSOSC}$ | Current consumption (1) | | | | 30 | | µA |
| $f_{SYSOSC}$ | SYSOSC frequency | | | 4.25 | 5.0 | 5.75 | MHz |
| $df_{SYSOSC}/dT$ | SYSOSC frequency temperature drift (2) | | | | 0.03 | | %/°C |
| $df_{SYSOSC}/dVCC$ | SYSOSC frequency supply voltage drift (3) | | | | 0.5 | | %/V |
| $DC_{SYSOSC}$ | Duty cycle | | | 40% | 50% | 60% | |

(1) Current measured on AVCC supply.
(2) Calculated using the box method: (MAX(–40°C to 85°C) – MIN(–40°C to 85°C)) / MIN(–40°C to 85°C) / (85°C – (–40°C))
(3) Calculated using the box method: (MAX(1.62 V to 3.7 V) – MIN(1.62 V to 3.7 V)) / MIN(1.62 V to 3.7 V) / (3.7 V – 1.62 V)


Copyright © 2015–2016, Texas Instruments Incorporated

### 5.24.4 Power Supply System

Table 5-18 lists the LDO $V_{CORE}$ regulator characteristics.

**Table 5-18. $V_{CORE}$ Regulator (LDO) Characteristics**

| PARAMETER | | TEST CONDITIONS | MIN | TYP | MAX | UNIT |
|---|---|---|---|---|---|---|
| $V_{CORE0-HP}$ | Static VCORE voltage Level 0 in active and LPM0 modes | Device power modes AM_LDO_VCORE0, LPM0_LDO_VCORE0 | 1.12 | 1.2 | 1.28 | V |
| $V_{CORE1-HP}$ | Static VCORE voltage Level 1 in active and LPM0 modes | Device power modes AM_LDO_VCORE1, LPM0_LDO_VCORE1 | 1.31 | 1.4 | 1.49 | V |
| $V_{CORE0-LF}$ | Static VCORE voltage Level 0 in low-frequency active and low frequency LPM0 modes | Device power modes AM_LF_VCORE0 | 1.12 | 1.2 | 1.28 | V |
| $V_{CORE1-LF}$ | Static VCORE voltage Level 1 in low-frequency active and low frequency LPM0 modes | Device power modes AM_LF_VCORE1 | 1.31 | 1.4 | 1.49 | V |
| $V_{CORE0-LPM34}$ | Static VCORE voltage Level 0 in LPM3 and LPM4 modes | Device power modes LPM3, LPM4 | 1.08 | 1.2 | 1.32 | V |
| $V_{CORE1-LPM34}$ | Static VCORE voltage Level 1 in LPM3 and LPM4 modes | Device power modes LPM3, LPM4 | 1.27 | 1.4 | 1.53 | V |
| $V_{CORE0-LPM35}$ | Static VCORE voltage Level 0 in LPM3.5 mode | Device power mode LPM3.5 | 1.08 | 1.2 | 1.32 | V |
| $I_{INRUSH-ST}$ | Inrush current at start-up | Device power-up | | | 200 | mA |
| $I_{PEAK-LDO}$ | Peak current drawn by LDO from $DV_{CC}$ | | | | 350 | mA |
| $I_{SC-coreLDO}$ | Short circuit current limit for core LDO | Measured when output is shorted to ground | | | 300 | mA |

Table 5-19 lists the DC-DC $V_{CORE}$ regulator characteristics.

**Table 5-19. $V_{CORE}$ Regulator (DC-DC) Characteristics**

| PARAMETER | | TEST CONDITIONS | MIN | TYP | MAX | UNIT |
|---|---|---|---|---|---|---|
| $DV_{CC-DCDC}$ | Allowed $DV_{CC}$ range for DC-DC operation | DCDC_FORCE = 1 | 1.8 | | 3.7 | V |
| $V_{DCDC_SO}$ (1) | DC-DC to LDO switch over voltage | $dDV_{CC}/dt$ = 1 V/ms, DCDC_FORCE = 0 | 1.8 | | 2.0 | V |
| $V_{CORE0-DCDC}$ | Static VCORE voltage Level 0 in DC-DC high-performance modes | Device power modes AM_DCDC_VCORE0, LPM0_DCDC_VCORE0 | 1.12 | 1.2 | 1.28 | V |
| $V_{CORE1-DCDC}$ | Static VCORE voltage Level 1 in DC-DC high-performance modes | Device power modes AM_DCDC_VCORE1, LPM0_DCDC_VCORE1 | 1.31 | 1.4 | 1.49 | V |
| $I_{PEAK-DCDC}$ | Peak current drawn by DC-DC from DVCC | | | | 300 | mA |
| $I_{SC-DCDC}$ | Short circuit current limit for DC-DC | Measured when output is shorted to ground | | | 500 | mA |

(1) When $DV_{CC}$ falls below this voltage, internally the regulator switches over to LDO from DC-DC.

Table 5-20 lists the VCCDET characteristics.

**Table 5-20. PSS, VCCDET**

over recommended ranges of supply voltage and operating free-air temperature (unless otherwise noted)

| PARAMETER | | TEST CONDITIONS | MIN | TYP | MAX | UNIT |
|---|---|---|---|---|---|---|
| $V_{VCC_VCCDET-}$ | VCCDET power-down level - trip point with falling $V_{CC}$ | $dDV_{CC}/d_t$ < 3 V/s (1) | 0.64 | 1.12 | 1.55 | V |
| $V_{VCC_VCCDET+}$ | VCCDET power-up level - trip point with rising $V_{CC}$ | $dDV_{CC}/d_t$ < 3 V/s (1) | 0.70 | 1.18 | 1.59 | V |
| $V_{VCC_VCC_hys}$ | VCCDET hysteresis | | 30 | 65 | 100 | mV |

(1) The VCCDET levels are measured with a slow-changing supply. Faster slopes can result in different levels.

Table 5-21 lists the SVSMH characteristics.

**Table 5-21. PSS, SVSMH**

over recommended ranges of supply voltage and operating free-air temperature (unless otherwise noted)

| PARAMETER | | TEST CONDITIONS | MIN | TYP | MAX | UNIT |
|---|---|---|---|---|---|---|
| $I_{SVSMH}$ | $SVSM_H$ current consumption, low-power mode | SVSMHOFF = 0, SVSMHLP = 1 | | 200 | 400 | nA |
| | $SVSM_H$ current consumption, high-performance mode | SVSMHOFF = 0, SVSMHLP = 0 | | 7 | 10 | µA |
| $V_{SVSMH-,HP}$ | $SVSM_H$ threshold level during high-performance mode (falling $DV_{CC}$) | SVSMHOFF = 0, SVSMHLP = 0, SVSMHTH = 0, DC ($dDV_{CC}/dt$ < 1V/s) | 1.59 | 1.64 | 1.71 | V |
| | | SVSMHOFF = 0, SVSMHLP = 0, SVSMHTH = 1, DC ($dDV_{CC}/dt$ < 1V/s) | 1.59 | 1.64 | 1.71 | |
| | | SVSMHOFF = 0, SVSMHLP = 0, SVSMHTH = 2, DC ($dDV_{CC}/dt$ < 1V/s) | 1.59 | 1.64 | 1.71 | |
| | | SVSMHOFF = 0, SVSMHLP = 0, SVSMHTH = 3, DC ($dDV_{CC}/dt$ < 1V/s) | 2.0 | 2.06 | 2.12 | |
| | | SVSMHOFF = 0, SVSMHLP = 0, SVSMHTH = 4, DC ($dDV_{CC}/dt$ < 1V/s) | 2.2 | 2.26 | 2.32 | |
| | | SVSMHOFF = 0, SVSMHLP = 0, SVSMHTH = 5, DC ($dDV_{CC}/dt$ < 1V/s) | 2.4 | 2.47 | 2.54 | |
| | | SVSMHOFF = 0, SVSMHLP = 0, SVSMHTH = 6, DC ($dDV_{CC}/dt$ < 1V/s) | 2.7 | 2.79 | 2.88 | |
| | | SVSMHOFF = 0, SVSMHLP = 0, SVSMHTH = 7, DC ($dDV_{CC}/dt$ < 1V/s) | 2.9 | 3.0 | 3.1 | |
| $V_{SVSMH+,HP}$ | $SVSM_H$ threshold level; High Performance Mode [rising $DV_{CC}$] | SVSMHOFF = 0, SVSMHLP = 0, SVSMHTH = 0, DC ($dDV_{CC}/dt$ < 1V/s) | 1.6 | 1.66 | 1.71 | V |
| | | SVSMHOFF = 0, SVSMHLP = 0, SVSMHTH = 1, DC ($dDV_{CC}/dt$ < 1V/s) | 1.6 | 1.66 | 1.71 | |
| | | SVSMHOFF = 0, SVSMHLP = 0, SVSMHTH = 2, DC ($dDV_{CC}/dt$ < 1V/s) | 1.6 | 1.66 | 1.71 | |
| | | SVSMHOFF = 0, SVSMHLP = 0, SVSMHTH = 3, DC ($dDV_{CC}/dt$ < 1V/s) | 2.02 | 2.07 | 2.14 | |
| | | SVSMHOFF = 0, SVSMHLP = 0, SVSMHTH = 4, DC ($dDV_{CC}/dt$ < 1V/s) | 2.22 | 2.27 | 2.34 | |
| | | SVSMHOFF = 0, SVSMHLP = 0, SVSMHTH = 5, DC ($dDV_{CC}/dt$ < 1V/s) | 2.42 | 2.48 | 2.56 | |
| | | SVSMHOFF = 0, SVSMHLP = 0, SVSMHTH = 6, DC ($dDV_{CC}/dt$ < 1V/s) | 2.72 | 2.8 | 2.9 | |
| | | SVSMHOFF = 0, SVSMHLP = 0, SVSMHTH = 7, DC ($dDV_{CC}/dt$ < 1V/s) | 2.92 | 3.01 | 3.12 | |


Copyright © 2015–2016, Texas Instruments Incorporated

## PSS, SVSMH *(continued)*

over recommended ranges of supply voltage and operating free-air temperature (unless otherwise noted)

| PARAMETER | | TEST CONDITIONS | MIN | TYP | MAX | UNIT |
|---|---|---|---|---|---|---|
| $V_{SVSMH-,LP}$ | $SVSM_H$ threshold level; Low Power Mode [falling $DV_{CC}$] | SVSMHOFF = 0, SVSMHLP = 1, SVSMHTH = 0, DC ($dDV_{CC}/dt$ < 1V/s) | 1.55 | 1.62 | 1.71 | V |
| | | SVSMHOFF = 0, SVSMHLP = 1, SVSMHTH = 1, DC ($dDV_{CC}/dt$ < 1V/s) | 1.55 | 1.62 | 1.71 | |
| | | SVSMHOFF = 0, SVSMHLP = 1, SVSMHTH = 2, DC ($dDV_{CC}/dt$ < 1V/s) | 1.55 | 1.62 | 1.71 | |
| | | SVSMHOFF = 0, SVSMHLP = 1, SVSMHTH = 3, DC ($dDV_{CC}/dt$ < 1V/s) | 2.0 | 2.09 | 2.18 | |
| | | SVSMHOFF = 0, SVSMHLP = 1, SVSMHTH = 4, DC ($dDV_{CC}/dt$ < 1V/s) | 2.2 | 2.3 | 2.4 | |
| | | SVSMHOFF = 0, SVSMHLP = 1, SVSMHTH = 5, DC ($dDV_{CC}/dt$ < 1V/s) | 2.4 | 2.51 | 2.62 | |
| | | SVSMHOFF = 0, SVSMHLP = 1, SVSMHTH = 6, DC ($dDV_{CC}/dt$ < 1V/s) | 2.7 | 2.83 | 2.94 | |
| | | SVSMHOFF = 0, SVSMHLP = 1, SVSMHTH = 7, DC ($dDV_{CC}/dt$ < 1V/s) | 2.87 | 3.0 | 3.13 | |
| $V_{SVSMH_hys}$ | $SVSM_H$ hysteresis | | | 15 | 30 | mV |
| $t_{PD,SVSMH}$ | $SVS_H$ propagation delay, high-performance mode | SVSMHOFF = 0, SVSMHLP = 0, very fast $dV_{DVCC}/dt$ | | 3 | 10 | µs |
| | $SVS_H$ propagation delay, low-power mode | SVSMHOFF = 0, SVSMHLP = 1, very fast $dV_{DVCC}/dt$ | | 25 | 100 | |
| $t_{(SVSMH)}$ | $SVSM_H$ on or off delay time | SVSMHOFF = 1 → 0, SVSMHLP = 0 (1) | | 17 | 40 | µs |

(1) If the SVSMH is kept disabled in active mode and is enabled before entering a low-power mode of the device (LPM3, LPM4, LPM3.5, or LPM4.5) care should be taken that sufficient time has elapsed since enabling of the module before entry into the device low-power mode to allow for successful wake up of the SVSMH module per the SVSMH on or off delay time specification. Otherwise, SVSMH may trip, causing the device to reset and wake up from the low-power mode.

### 5.24.5 Digital I/Os

Table 5-22 lists the characteristics of the digital inputs.

**Table 5-22. Digital Inputs (Applies to Both Normal and High-Drive I/Os)**

over recommended ranges of supply voltage and operating free-air temperature (unless otherwise noted)

| PARAMETER | | TEST CONDITIONS | $V_{CC}$ | MIN | TYP | MAX | UNIT |
|---|---|---|---|---|---|---|---|
| $V_{IT+}$ | Positive-going input threshold voltage | | 2.2 V | 0.99 | | 1.65 | V |
| | | | 3 V | 1.35 | | 2.25 | |
| $V_{IT-}$ | Negative-going input threshold voltage | | 2.2 V | 0.55 | | 1.21 | V |
| | | | 3 V | 0.75 | | 1.65 | |
| $V_{hys}$ | Input voltage hysteresis ($V_{IT+} – V_{IT-}$) | | 2.2 V | 0.32 | | 0.84 | V |
| | | | 3 V | 0.4 | | 1.0 | |
| $R_{Pull}$ | Pullup or pulldown resistor | For pullup: $V_{IN} = V_{SS}$,<br>For pulldown: $V_{IN} = V_{CC}$ | | 20 | 30 | 40 | kΩ |
| $C_{I,dig}$ | Input capacitance, digital only port pins | $V_{IN} = V_{SS}$ or $V_{CC}$ | | | 3 | | pF |
| $C_{I,ana}$ | Input capacitance, port pins shared with analog functions | $V_{IN} = V_{SS}$ or $V_{CC}$ | | | 5 | | pF |
| $I_{Ikg,ndio}$ | Normal I/O high-impedance input leakage current | See (1)(2) | 2.2 V, 3 V | | | ±20 | nA |
| $I_{Ikg,hdio}$ | High-drive I/O high-impedance input leakage current | See (1)(2) | 2.2 V, 3 V | | | ±20 | nA |
| $t_{int}$ | External interrupt timing (external trigger pulse duration to set interrupt flag) | Ports with interrupt capability and without glitch filter (3) | 2.2 V, 3 V | 20 | | | ns |
| | | Ports with interrupt capability and with glitch filter but glitch filter disabled (GLTFLT_EN = 0) (3) | 2.2 V, 3 V | 20 | | | |
| | | Ports with interrupt capability and with glitch filter, glitch filter enabled (GLTFTL_EN = 1) (4) | 2.2 V, 3 V | 0.25 | | 1 | µs |
| $t_{RST}$ | External reset pulse duration on RSTn pin(5) | | 2.2 V, 3 V | 1 | | | µs |

(1) The input leakage current is measured with $V_{SS}$ or $V_{CC}$ applied to the corresponding pins, unless otherwise noted.
(2) The input leakage of the digital port pins is measured individually. The port pin is selected for input and the pullup/pulldown resistor is disabled.
(3) An external signal sets the interrupt flag every time the minimum interrupt pulse duration $t_{int}$ is met. It may be set by trigger signals shorter than $t_{int}$.
(4) A trigger pulse duration less than the MIN value is always filtered, and a trigger pulse duration more than the MAX value is always passed. The trigger pulse may or may not be filtered if the duration is between the MIN and MAX values.
(5) Not applicable if RSTn/NMI pin configured as NMI.


Copyright © 2015–2016, Texas Instruments Incorporated

Table 5-23 lists the characteristics of the normal-drive digital outputs. See Figure 5-19 through Figure 5-22 for the typical characteristics graphs.

**Table 5-23. Digital Outputs, Normal I/Os**

over recommended ranges of supply voltage and operating free-air temperature (unless otherwise noted)

| PARAMETER | | TEST CONDITIONS | $V_{CC}$ | MIN | MAX | UNIT |
|---|---|---|---|---|---|---|
| $V_{OH}$ | High-level output voltage | $I_{(OHmax)}$ = –1 mA (1) | 2.2 V | $V_{CC}$ – 0.25 | $V_{CC}$ | V |
| | | $I_{(OHmax)}$ = –3 mA (2) | | $V_{CC}$ – 0.60 | $V_{CC}$ | |
| | | $I_{(OHmax)}$ = –2 mA (1) | 3.0 V | $V_{CC}$ – 0.25 | $V_{CC}$ | |
| | | $I_{(OHmax)}$ = –6 mA (2) | | $V_{CC}$ – 0.60 | $V_{CC}$ | |
| $V_{OL}$ | Low-level output voltage | $I_{(OLmax)}$ = 1 mA (1) | 2.2 V | $V_{SS}$ | $V_{SS}$ + 0.25 | V |
| | | $I_{(OLmax)}$ = 3 mA (2) | | $V_{SS}$ | $V_{SS}$ + 0.60 | |
| | | $I_{(OLmax)}$ = 2 mA (1) | 3.0 V | $V_{SS}$ | $V_{SS}$ + 0.25 | |
| | | $I_{(OLmax)}$ = 6 mA (2) | | $V_{SS}$ | $V_{SS}$ + 0.60 | |
| $f_{Px.y}$ | Port output frequency (with RC load) (3) | VCORE = 1.4 V, $C_L$ = 20 pF, $R_L$ (4) (5) | 1.62 V | 24 | | MHz |
| | | | 2.2 V | 24 | | |
| | | | 3.0 V | 24 | | |
| $d_{Px.y}$ | Port output duty cycle (with RC Load) | VCORE = 1.4 V, $C_L$ = 20 pF, $R_L$ (4) (5) | 1.62 V | 40% | 60% | |
| | | | 2.2 V | 40% | 60% | |
| | | | 3.0 V | 45% | 55% | |
| $f_{Port_CLK}$ | Clock output frequency (3) | VCORE = 1.4 V, $C_L$ = 20 pF (5) | 1.62 V | 24 | | MHz |
| | | | 2.2 V | 24 | | |
| | | | 3.0 V | 24 | | |
| $d_{Port_CLK}$ | Clock output duty cycle | VCORE = 1.4 V, $C_L$ = 20 pF (5) | 1.62 V | 40% | 60% | |
| | | | 2.2 V | 40% | 60% | |
| | | | 3.0 V | 45% | 55% | |
| $t_{rise,dig}$ | Port output rise time, digital only port pins | $C_L$ = 20 pF (6) | 1.62 V | | 8 | ns |
| | | | 2.2 V | | 5 | |
| | | | 3.0 V | | 3 | |
| $t_{fall,dig}$ | Port output fall time, digital only port pins | $C_L$ = 20 pF (7) | 1.62 V | | 8 | ns |
| | | | 2.2 V | | 5 | |
| | | | 3.0 V | | 3 | |
| $t_{rise,ana}$ | Port output rise time, port pins with shared analog functions | $C_L$ = 20 pF (6) | 1.62 V | | 8 | ns |
| | | | 2.2 V | | 5 | |
| | | | 3.0 V | | 3 | |
| $t_{fall,ana}$ | Port output fall time, port pins with shared analog functions | $C_L$ = 20 pF (7) | 1.62 V | | 8 | ns |
| | | | 2.2 V | | 5 | |
| | | | 3.0 V | | 3 | |

(1) The maximum total current, $I_{(OHmax)}$ and $I_{(OLmax)}$, for all outputs combined should not exceed ±48 mA to hold the maximum voltage drop specified.
(2) The maximum total current, $I_{(OHmax)}$ and $I_{(OLmax)}$, for all outputs combined should not exceed ±100 mA to hold the maximum voltage drop specified.
(3) The port can output frequencies at least up to the specified limit - it might support higher frequencies.
(4) A resistive divider with 2 × R1 and R1 = 3.2kΩ between $V_{CC}$ and $V_{SS}$ is used as load. The output is connected to the center tap of the divider. $C_L$ = 20 pF is connected to the output to $V_{SS}$.
(5) The output voltage reaches at least 20% and 80% $V_{CC}$ at the specified toggle frequency.
(6) Measured between 20% of $V_{CC}$ to 80% of $V_{CC}$.
(7) Measured between 80% of $V_{CC}$ to 20% of $V_{CC}$.

Table 5-24 lists the characteristics of the high-drive digital outputs. See Figure 5-23 through Figure 5-26 for the typical characteristics graphs.

### Table 5-24. Digital Outputs, High-Drive I/Os

over recommended ranges of supply voltage and operating free-air temperature (unless otherwise noted)

| PARAMETER | | TEST CONDITIONS | $V_{CC}$ | MIN | MAX | UNIT |
|---|---|---|---|---|---|---|
| $V_{OH}$ | High-level output voltage | $I_{(OHmax)}$ = –5 mA(1) | 2.2 V | $V_{CC}$ – 0.25 | $V_{CC}$ | V |
| | | $I_{(OHmax)}$ = –15 mA(2) | | $V_{CC}$ – 0.60 | $V_{CC}$ | |
| | | $I_{(OHmax)}$ = –10 mA(1) | 3.0 V | $V_{CC}$ – 0.25 | $V_{CC}$ | |
| | | $I_{(OHmax)}$ = –20 mA(2) | | $V_{CC}$ – 0.50 | $V_{CC}$ | |
| $V_{OL}$ | Low-level output voltage | $I_{(OLmax)}$ = 5 mA(1) | 2.2 V | $V_{SS}$ | $V_{SS}$ + 0.25 | V |
| | | $I_{(OLmax)}$ = 15 mA(2) | | $V_{SS}$ | $V_{SS}$ + 0.60 | |
| | | $I_{(OLmax)}$ = 10 mA(1) | 3.0 V | $V_{SS}$ | $V_{SS}$ + 0.25 | |
| | | $I_{(OLmax)}$ = 20 mA(2) | | $V_{SS}$ | $V_{SS}$ + 0.50 | |
| $f_{Px.y}$ | Port output frequency (with RC load)(3) | VCORE = 1.4 V, $C_L$ = 80 pF, $R_L$ (4) (5) | 1.62 V | 24 | | MHz |
| | | | 2.2 V | 24 | | |
| | | | 3.0 V | 24 | | |
| $d_{Px.y}$ | Port output duty cycle (with RC Load) | VCORE = 1.4 V, $C_L$ = 80 pF, $R_L$ (4) (5) | 1.62 V | 45% | 55% | |
| | | | 2.2 V | 45% | 55% | |
| | | | 3.0 V | 45% | 55% | |
| $f_{Port_CLK}$ | Clock output frequency(3) | VCORE = 1.4 V, $C_L$ = 80 pF(5) | 1.62 V | 24 | | MHz |
| | | | 2.2 V | 24 | | |
| | | | 3.0 V | 24 | | |
| $d_{Port_CLK}$ | Clock output duty cycle | VCORE = 1.4 V, $C_L$ = 80 pF(5) | 1.62 V | 45% | 55% | |
| | | | 2.2 V | 45% | 55% | |
| | | | 3.0 V | 45% | 55% | |
| $t_{rise}$ | Port output rise time | $C_L$ = 80 pF (6) | 1.62 V | | 8 | ns |
| | | | 2.2 V | | 5 | |
| | | | 3.0 V | | 3 | |
| $t_{fall}$ | Port output fall time | $C_L$ = 80 pF (7) | 1.62 V | | 8 | ns |
| | | | 2.2 V | | 5 | |
| | | | 3.0 V | | 3 | |

(1) The maximum total current, $I_{(OHmax)}$ and $I_{(OLmax)}$, for all outputs combined should not exceed ±48 mA to hold the maximum voltage drop specified.
(2) The maximum total current, $I_{(OHmax)}$ and $I_{(OLmax)}$, for all outputs combined should not exceed ±100 mA to hold the maximum voltage drop specified.
(3) The port can output frequencies at least up to the specified limit, and it might support higher frequencies.
(4) A resistive divider with 2 × R1 and R1 = 3.2 kΩ between $V_{CC}$ and $V_{SS}$ is used as load. The output is connected to the center tap of the divider. $C_L$ = 80 pF is connected to the output to $V_{SS}$.
(5) The output voltage reaches at least 20% and 80% $V_{CC}$ at the specified toggle frequency.
(6) Measured between 20% of $V_{CC}$ to 80% of $V_{CC}$.
(7) Measured between 80% of $V_{CC}$ to 20% of $V_{CC}$.

Table 5-25 lists the frequencies of the pin-oscillator ports. See Figure 5-27 and Figure 5-28 for the typical characteristics graphs.

### Table 5-25. Pin-Oscillator Frequency, Ports Px

over recommended ranges of supply voltage and operating free-air temperature (unless otherwise noted)

| PARAMETER | | TEST CONDITIONS | $V_{CC}$ | MIN | TYP | MAX | UNIT |
|---|---|---|---|---|---|---|---|
| $fo_{Px.y}$ | Pin-oscillator frequency | Px.y, $C_L$ = 10 pF(1) | 3.0 V | | 1900 | | kHz |
| | | Px.y, $C_L$ = 20 pF(1) | 3.0 V | | 1150 | | kHz |

(1) $C_L$ is the external load capacitance connected from the output to VSS and includes all parasitic effects such as PCB traces.


Copyright © 2015–2016, Texas Instruments Incorporated

### 5.24.5.1 Typical Characteristics, Normal-Drive I/O Outputs at 3.0 V and 2.2 V

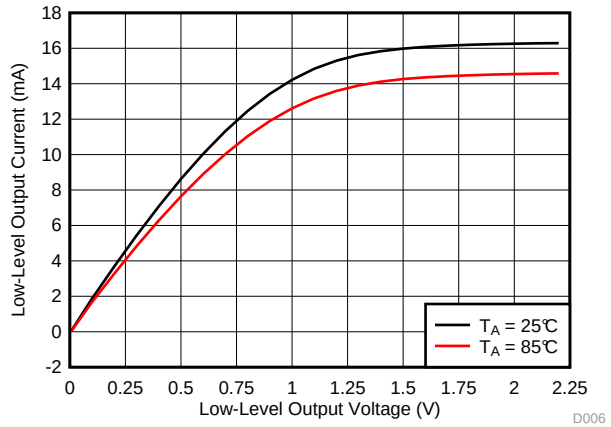


$V_{CC}$ = 2.2 V P7.0

**Figure 5-19. Low-Level Output Voltage vs Low-Level Output Current**

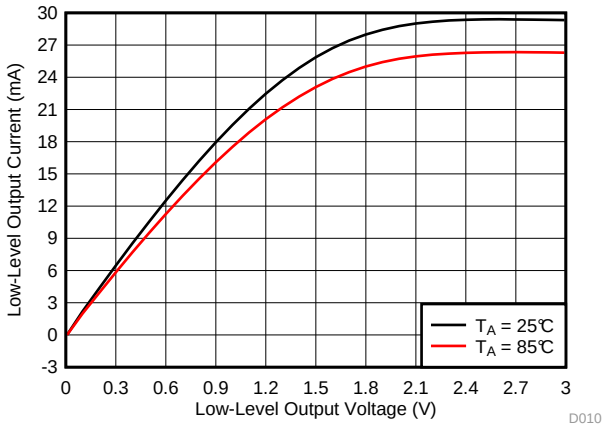


$V_{CC}$ = 3.0 V P7.0

**Figure 5-20. Low-Level Output Voltage vs Low-Level Output Current**

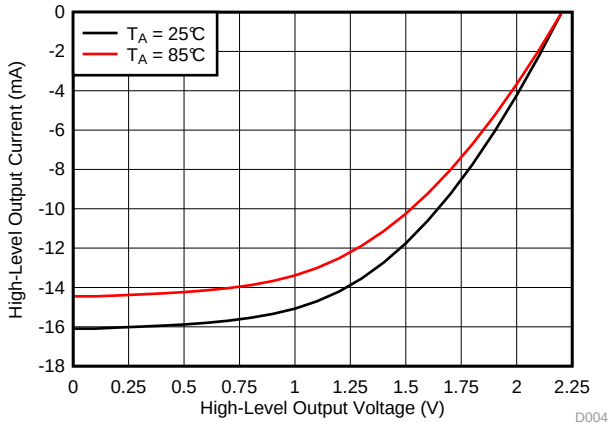


$V_{CC}$ = 2.2 V P7.0

**Figure 5-21. High-Level Output Voltage vs High-Level Output Current**

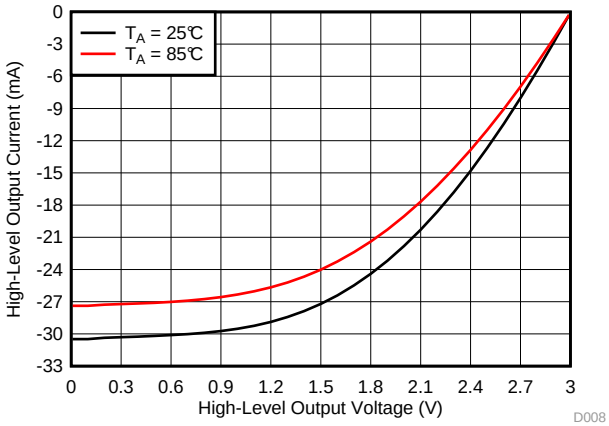


$V_{CC}$ = 3.0 V P7.0

**Figure 5-22. High-Level Output Voltage vs High-Level Output Current**

### 5.24.5.2 Typical Characteristics, High-Drive I/O Outputs at 3.0 V and 2.2 V

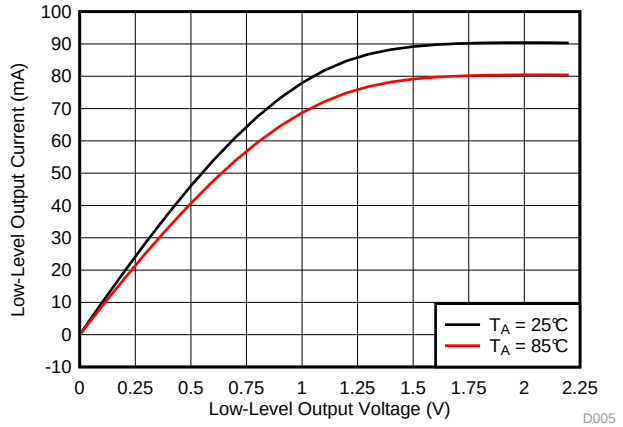


$V_{CC}$ = 2.2 V P2.1

**Figure 5-23. Low-Level Output Voltage vs Low-Level Output Current**

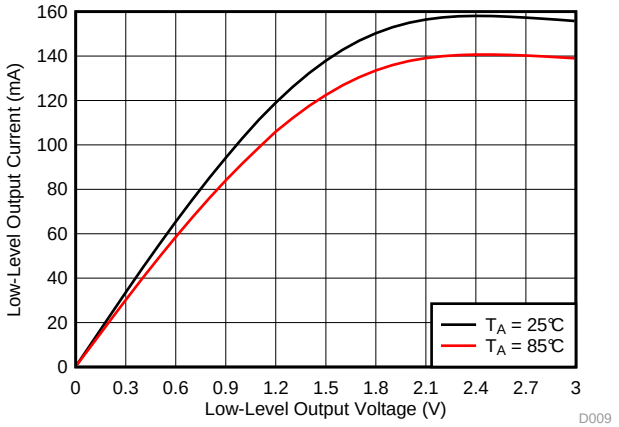


$V_{CC}$ = 3.0 V P2.1

**Figure 5-24. Low-Level Output Voltage vs Low-Level Output Current**

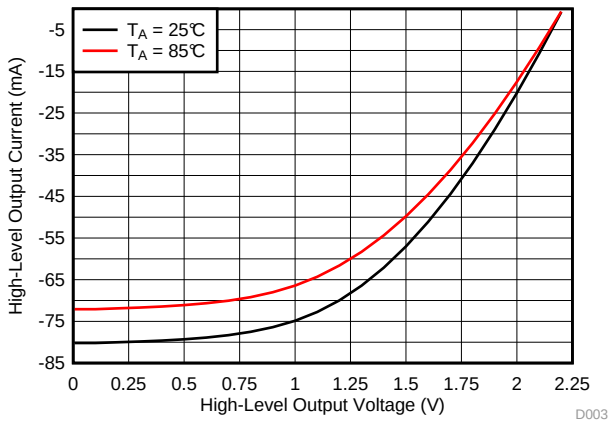


$V_{CC}$ = 2.2 V P2.1

**Figure 5-25. High-Level Output Voltage vs High-Level Output Current**

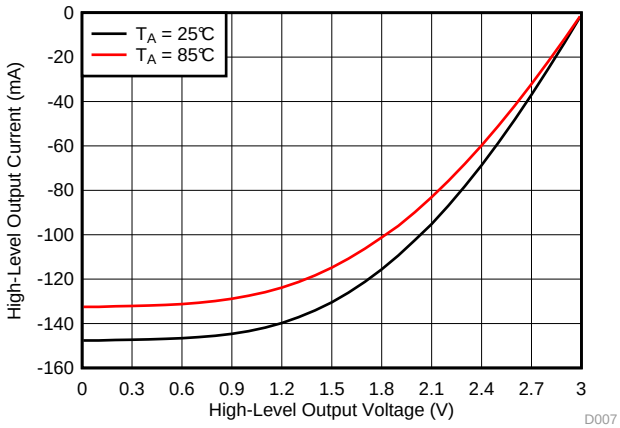


$V_{CC}$ = 3.0 V P2.1

**Figure 5-26. High-Level Output Voltage vs High-Level Output Current**


Copyright © 2015–2016, Texas Instruments Incorporated

### 5.24.5.3 Typical Characteristics, Pin-Oscillator Frequency

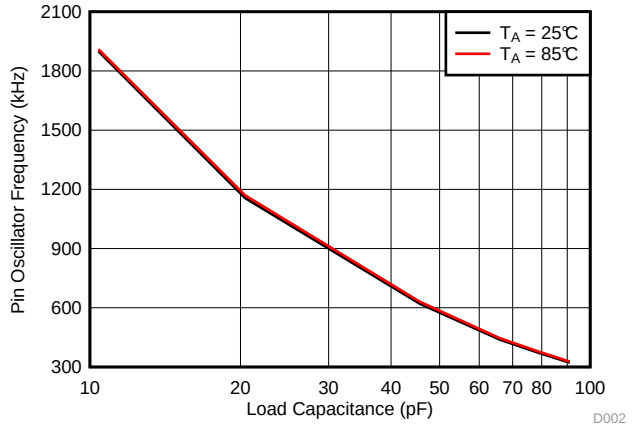


One output active at a time $V_{CC}$ = 3.0 V

**Figure 5-27. Load Capacitance vs Pin Oscillator Frequency**

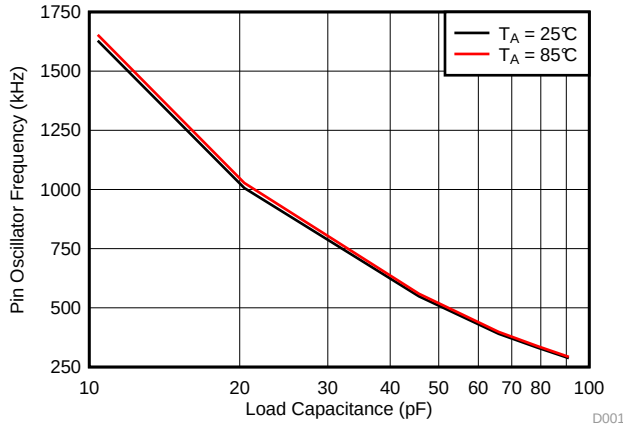


One output active at a time $V_{CC}$ = 2.2 V

**Figure 5-28. Load Capacitance vs Pin Oscillator Frequency**

### 5.24.6 14-Bit ADC

Table 5-26 lists the power supply and input range conditions for the ADC.

**Table 5-26. 14-Bit ADC, Power Supply and Input Range Conditions**

over recommended ranges of supply voltage and operating free-air temperature (unless otherwise noted)

| PARAMETER | | TEST CONDITIONS | $V_{CC}$ | MIN | NOM | MAX | UNIT |
|---|---|---|---|---|---|---|---|
| $AV_{CC}$ | Analog supply voltage | AVCC and DVCC are connected together, AVSS and DVSS are connected together, V(AVSS) = V(DVSS) = 0 V, ADC14PWRMD = 2 | | 1.62 | | 3.7 | V |
| $AV_{CC}$ | Analog supply voltage | AVCC and DVCC are connected together, AVSS and DVSS are connected together, V(AVSS) = V(DVSS) = 0 V, ADC14PWRMD = 0 | | 1.8 | | 3.7 | V |
| V(Ax) | Analog input voltage range(1) | All ADC analog input pins Ax | | 0 | | AVCC | V |
| $V_{CM}$ | Input common-mode range | All ADC analog input pins Ax (ADC14DIF = 1) | | 0 | VREF / 2 | VREF | V |
| $I_{(ADC14)}$ single-ended mode | Operating supply current into AVCC plus DVCC terminal(2) | $f_{ADC14CLK}$ = 25 MHz, 1 Msps (ADC14PWRMD = 0), ADC14ON = 1, ADC14DIF = 0, ADC14VRSEL = 0xE, REFON = 0, ADC14SHT0x = 0x0, ADC14SHT1x = 0x0 | 3.0 V | | 490 | 640 | µA |
| | | | 2.2 V | | 450 | 580 | |
| | | $f_{ADC14CLK}$ = 5 MHz, 200 ksps (ADC14PWRMD = 2), ADC14ON = 1, ADC14DIF = 0, ADC14VRSEL = 0xE, REFON = 0, ADC14SHT0x = 0x0, ADC14SHT1x = 0x0 | 3.0 V | | 215 | 270 | |
| | | | 2.2 V | | 210 | 260 | |
| $I_{(ADC14)}$ differential mode | Operating supply current into AVCC plus DVCC terminal(2) | $f_{ADC14CLK}$ = 25 MHz, 1 Msps (ADC14PWRMD = 0), ADC14ON = 1, ADC14DIF = 1, ADC14VRSEL = 0xE, REFON = 0, ADC14SHT0x = 0x0, ADC14SHT1x = 0x0 | 3.0 V | | 690 | 875 | µA |
| | | | 2.2 V | | 620 | 785 | |
| | | $f_{ADC14CLK}$ = 5 MHz, 200 ksps (ADC14PWRMD = 2), ADC14ON = 1, ADC14DIF = 1, ADC14VRSEL = 0xE, REFON = 0, ADC14SHT0x = 0x0, ADC14SHT1x = 0x0 | 3.0 V | | 275 | 335 | |
| | | | 2.2 V | | 260 | 320 | |
| $C_I$ | Input capacitance into a single terminal(3) | | | | 12 | 15 | pF |
| $R_I$ | Input MUX ON-resistance | 0 V ≤ V(Ax)≤ AVCC | 1.8 V to 3.7 V | | 0.135 | 1 | kΩ |
| | | | 1.62 V to <1.8 V | | 0.15 | 1.5 | |

(1) The analog input voltage range must be within the selected reference voltage range $V_{R+}$ to $V_{R-}$ for valid conversion results.
(2) The internal reference supply current is not included in current consumption parameter $I_{(ADC14)}$.
(3) Represents only the ADC switching capacitance. Refer to Digital Inputs electrical specification for internal parasitic pin capacitance.


Copyright © 2015–2016, Texas Instruments Incorporated

Table 5-27 lists the timing parameters of the ADC.

**Table 5-27. 14-Bit ADC, Timing Parameters**

over recommended ranges of supply voltage and operating free-air temperature (unless otherwise noted)

| PARAMETER | | TEST CONDITIONS | $V_{CC}$ | MIN | TYP | MAX | UNIT |
|---|---|---|---|---|---|---|---|
| $f_{ADC14CLK}$ | ADC clock frequency(1) | ADC14PWRMD = 0 | 1.8 V to 3.7 V | 0.128 | | 25 | MHz |
| | | ADC14PWRMD = 2 | 1.62 V to 3.7 V | 0.128 | | 5.75 | |
| $N_{CONVERT}$ | Clock cycles for conversion | ADC14RES = 11 | | | 16 | | cycles |
| | | ADC14RES = 10 | | | 14 | | |
| | | ADC14RES = 01 | | | 11 | | |
| | | ADC14RES = 00 | | | 9 | | |
| $t_{ADC14ON}$ | Turnon settling time of ADC | See (2) | | | | 1.5 | µs |
| $t_{Sample}$ | Sampling time(3) (4) | $R_S$ = 200 Ω, $C_{pext}$ = 10 pF, $R_I$ = 1 kΩ, $C_I$ = 15 pF, $C_{pint}$ = 5 pF | | 0.215 | | | µs |

(1) MODOSC can be used for 1 Msps and SYSOSC can be used for 200 ksps sampling rate operations of ADC.
(2) The condition is that the error in a conversion started after $t_{ADC14ON}$ is less than ±1 LSB. The reference and input signal are already settled.
(3) Sampling time should be at least $4 \times (1 / f_{ADC14CLK})$.
(4) $t_{sample} \geq (n + 1) \times \ln(2) \times [(R_S + R_I) \times C_I + R_S \times (C_{pext} + C_{pint})]$, where n = ADC resolution =14, $R_S$ = external source resistance, $C_{pext}$ = external parasitic capacitance.

Table 5-28 lists the linearity parameters of the ADC.

**Table 5-28. 14-Bit ADC, Linearity Parameters(1)(2)**

over recommended ranges of supply voltage and operating free-air temperature (unless otherwise noted)

| PARAMETER | | TEST CONDITIONS | MIN | TYP | MAX | UNIT |
|---|---|---|---|---|---|---|
| Resolution | | | | 14 | | bits |
| $E_I$ | Integral linearity error (INL) | | | | ±2.3 | LSB |
| $E_D$ | Differential linearity error (DNL) | | –0.99 | | 1 | LSB |
| $E_O$ | Offset error | ADC14VRSEL = 0xE, 0xF | | ±0.2 | ±1 | mV |
| | | ADC14VRSEL = 0x1 | | ±1.2 | ±2 | |
| $E_G$ | Gain error | ADC14VRSEL = 0xE | | ±2 | ±4 | LSB |
| | | ADC14VRSEL = 0xF | | ±20 | ±60 | |
| | | ADC14VRSEL = 0x1 | | ±50 | ±180 | |
| $E_T$ | Total unadjusted error | ADC14VRSEL = 0xE | | ±4 | ±15 | LSB |
| | | ADC14VRSEL = 0xF | | ±22 | ±62 | |
| | | ADC14VRSEL = 0x1 | | ±55 | ±185 | |

(1) Minimum reference voltage of 1.45 V is necessary to meet the specified accuracy. Lower reference voltage down to 1.2 V can be applied for 1 Msps sampling rate with reduced accuracy requirements.
(2) VeREF- pin should be connected to onboard ground for ADC14VRSEL = 0xE.

Copyright © 2015–2016, Texas Instruments Incorporated

Table 5-29 lists the dynamic parameters of the ADC.

**Table 5-29. 14-Bit ADC, Dynamic Parameters(1)**

over recommended ranges of supply voltage and operating free-air temperature (unless otherwise noted)

| PARAMETER | | TEST CONDITIONS | MIN | TYP | MAX | UNIT |
|---|---|---|---|---|---|---|
| SINAD(2) | Signal-to-noise and distortion | 1 Msps, ADC14DIF = 0, ADC14VRSEL = 0xE, 2.5-V reference, 20-kHz input sine, LDO based operation | 71 | 73 | | dB |
| | | 1 Msps, ADC14DIF = 0, ADC14VRSEL = 0xE, 2.5-V reference, 20-kHz input sine, DC-DC based operation | 62 | 70 | | |
| | | 1 Msps, ADC14DIF = 1, ADC14VRSEL = 0xE, 2.5-V reference, 20-kHz input sine | 79 | 81 | | |
| ENOB(2) | Effective number of bits | 1 Msps, ADC14DIF = 0, ADC14VRSEL = 0xE, 2.5-V reference, 20-kHz input sine, LDO based operation | 11.5 | 11.8 | | bit |
| | | 1 Msps, ADC14DIF = 0, ADC14VRSEL = 0xE, 2.5-V reference, 20-kHz input sine, DC-DC based operation | 10 | 11.3 | | |
| | | 1 Msps, ADC14DIF = 1, ADC14VRSEL = 0xE, 2.5-V reference, 20-kHz input sine | 12.8 | 13.2 | | |
| CMRR_DC | Common-mode rejection ratio, DC | Common-mode input signal = 0 to VREF pp at DC, ADC14DIF = 1 | 70 | 85 | | dB |
| CMRR_AC | Common-mode rejection ratio, AC | Common-mode input signal = 0 to VREF pp at 1 MHz, ADC14DIF = 1 | 55 | 65 | | dB |
| PSRR_DC | Power supply rejection ratio, DC | $AV_{CC} = AV_{CC\ (min)}$ to $AV_{CC(max)}$, ADC14DIF = 0, ADC14VRSEL = 0xE | | 1 | 2.5 | mV/V |
| | | $AV_{CC} = AV_{CC\ (min)}$ to $AV_{CC(max)}$, ADC14DIF = 1, ADC14VRSEL = 0xE | | 50 | 150 | µV/V |
| PSRR_AC | Power supply rejection ratio, AC | $dAV_{CC}$ = 0.1 V at 1 kHz, ADC14DIF = 0, ADC14VRSEL = 0xE | | 1 | | mV/V |
| | | $dAV_{CC}$ = 0.1 V at 1 kHz, ADC14DIF = 1, ADC14VRSEL = 0xE | | 50 | | µV/V |

(1) VeREF- pin should be connected to onboard ground for ADC14VRSEL = 0xE.
(2) ADC clock derived from HFXT oscillator.


Copyright © 2015–2016, Texas Instruments Incorporated

Table 5-30 lists the characteristics of the temperature sensor and built-in $V_{1/2}$.

**Table 5-30. 14-Bit ADC, Temperature Sensor and Built-In $V_{1/2}$**

over recommended ranges of supply voltage and operating free-air temperature (unless otherwise noted)

| PARAMETER | | TEST CONDITIONS | $V_{CC}$ | MIN | TYP | MAX | UNIT |
|---|---|---|---|---|---|---|---|
| $V_{SENSOR}$ | See (1) (2) | ADC14ON = 1, ADC14TCMAP = 1, $T_A$ = 0°C | | | 685 | | mV |
| $TC_{SENSOR}$ | See (2) | ADC14ON = 1, ADC14TCMAP = 1 | | | 1.9 | | mV/°C |
| $t_{SENSOR}$ (sample) | Sample time required if ADCTCMAP = 1 and channel (MAX – 1) is selected(3) | ADC14ON = 1, ADC14TCMAP = 1, Error of conversion result ≤ 1 LSB | | 5 | | | µs |
| $V_{1/2}$ | AVCC voltage divider for ADC14BATMAP = 1 on MAX input channel | ADC14ON = 1, ADC14BATMAP = 1 | | 48% | 50% | 52% | |
| $t_{V\ 1/2}$ (sample) | Sample time required if ADC14BATMAP = 1 and channel MAX is selected(4) | ADC14ON = 1, ADC14BMAP = 1 | | 1 | | | µs |

(1) The temperature sensor offset can be as much as ±35°C. TI recommends a single-point calibration to minimize the offset error of the built-in temperature sensor.
(2) The TLV structure contains calibration values for 30°C ±3°C and 85°C ±3°C for each of the available reference voltage levels. The sensor voltage can be computed as $V_{SENSE} = TC_{SENSOR} \times (\text{Temperature,°C}) + V_{SENSOR}$, where $TC_{SENSOR}$ and $V_{SENSOR}$ can be computed from the calibration values for higher accuracy.
(3) The typical equivalent impedance of the sensor is 250 kΩ. The sample time required includes the sensor-on time $t_{SENSOR(on)}$.
(4) The on-time $t_{V1/2(on)}$ is included in the sampling time $t_{V\ 1/2\ (sample)}$. No additional on time is needed.

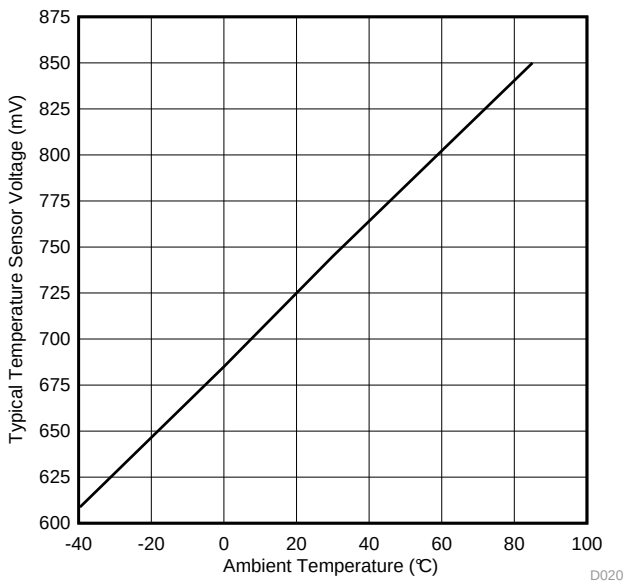


**Figure 5-29. Typical Temperature Sensor Voltage**

Table 5-31 lists the characteristics of the internal reference buffers of the ADC.

**Table 5-31. 14-Bit ADC, Internal Reference Buffers**

over recommended ranges of supply voltage and operating free-air temperature (unless otherwise noted)

| PARAMETER | | TEST CONDITIONS | $V_{CC}$ | MIN | TYP | MAX | UNIT |
|---|---|---|---|---|---|---|---|
| $I_{REF+}$ | Operating supply current into AVCC terminal(1) | ADC ON, REFOUT = 0, ADC14PWRMD = 0, REFVSEL = {0, 1, 3} | 3 V | | 600 | 800 | µA |
| | | ADC ON, REFOUT = 0, ADC14PWRMD = 2, REFVSEL = {0, 1, 3} | | | 200 | 300 | |
| | | ADC ON, REFOUT = 1, ADC14PWRMD = 2, REFVSEL = {0, 1, 3} | | | 650 | 850 | |
| $t_{on}$ | Turnon time | | 3 V | | | 5 | µs |

(1) The internal reference current is supplied through terminal AVCC.

Table 5-32 lists the characteristics of the ADC external reference.

**Table 5-32. 14-Bit ADC, External Reference**

over recommended ranges of supply voltage and operating free-air temperature (unless otherwise noted)

| PARAMETER | | TEST CONDITIONS | MIN | TYP | MAX | UNIT |
|---|---|---|---|---|---|---|
| $V_{eREF+}$ | Positive external reference voltage input(1) | | 1.45 | | $AV_{CC}$ | V |
| $V_{eREF-}$ | Negative external reference voltage input | | | | 0 | V |
| ($V_{eREF+}$ - $V_{eREF-}$) | Differential external reference voltage input(1) | | 1.45 | | $AV_{CC}$ | V |
| $I_{VeREF+}$ $I_{VeREF-}$ | Static input current in single ended input mode | 1.45 V ≤ $V_{eREF+}$ ≤ $V_{AVCC}$, $V_{eREF-}$ = 0 V, $f_{ADC14CLK}$ = 25 MHz, ADC14SHT0x = 0x1, ADC14SHT1x = 0x1, ADC14DIF = 0 | | | ±75 | µA |
| | | 1.45 V ≤ $V_{eREF+}$ ≤ $V_{AVCC}$, $V_{eREF-}$ = 0 V, $f_{ADC14CLK}$ = 5 MHz, ADC14SHT0x = 0x1, ADC14SHT1x = 0x1, ADC14DIF = 0 | | | ±15 | |
| $I_{VeREF+}$ $I_{VeREF-}$ | Static input current in differential input mode | 1.45 V ≤ $V_{eREF+}$ ≤ $V_{AVCC}$, $V_{eREF-}$ = 0 V, $f_{ADC14CLK}$ = 25 MHz, ADC14SHT0x = 0x1, ADC14SHT1x = 0x1, ADC14DIF = 1 | | | ±150 | µA |
| | | 1.45 V ≤ $V_{eREF+}$ ≤ $V_{AVCC}$, $V_{eREF-}$ = 0 V $f_{ADC14CLK}$ = 5 MHz, ADC14SHT0x = 0x1, ADC14SHT1x = 0x1, ADC14DIF = 1 | | | ±30 | |
| $C_{VeREF+}$ | Capacitance at VeREF+ terminal | See (2) | 5 | | | µF |

(1) Lower reference voltage down to 1.2 V can be applied for 1 Msps sampling rate with reduced accuracy requirements of linearity parameters.
(2) Two decoupling capacitors, 5 µF and 50 nF, should be connected to VeREF+ terminal to decouple the dynamic current required for an external reference source if it is used for the ADC14. See also the *MSP432P4xx Family Technical Reference Manual*.


Copyright © 2015–2016, Texas Instruments Incorporated

### 5.24.6.1 Typical Characteristics of ADC

typical characteristics at 3 V, 25°C, and 1-Msps sampling rate of ADC (unless otherwise specified)

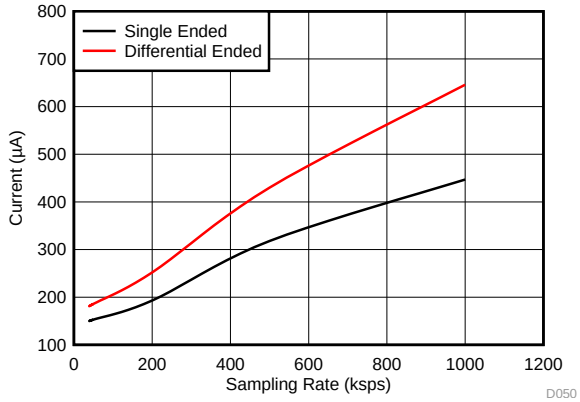


VRSEL = 14 VREF = 2.5 V
Resolution = 14 Bit ADC14PWRMD = 0

**Figure 5-30. Current vs Sampling Rate**

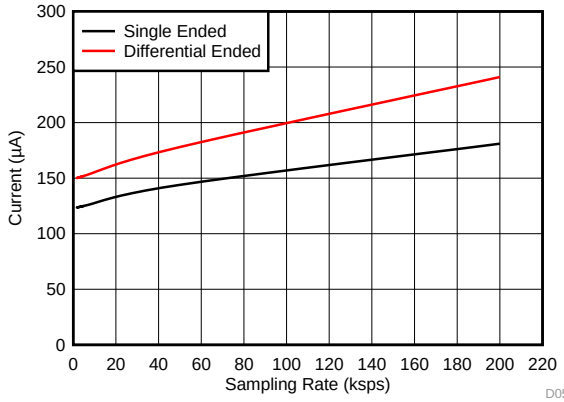


VRSEL = 14 VREF = 2.5 V
Resolution = 12 Bit ADC14PWRMD = 2

**Figure 5-31. Current vs Sampling Rate**

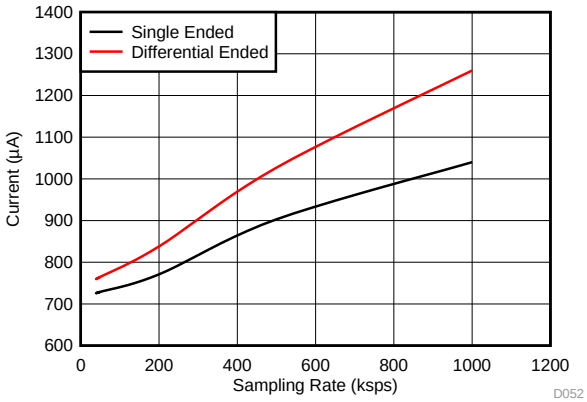


VRSEL = 1 VREF = 2.5 V
REFOUT = 0 ADC14PWRMD = 0
Resolution = 14 Bit

**Figure 5-32. Current vs Sampling Rate**

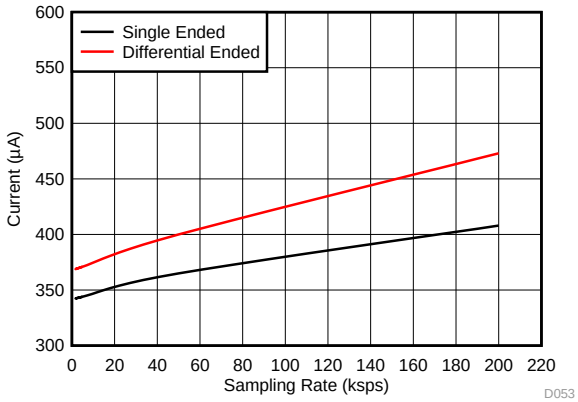


VRSEL = 1 VREF = 2.5 V
REFOUT = 0 ADC14PWRMD = 2
Resolution = 12 Bit

**Figure 5-33. Current vs Sampling Rate**

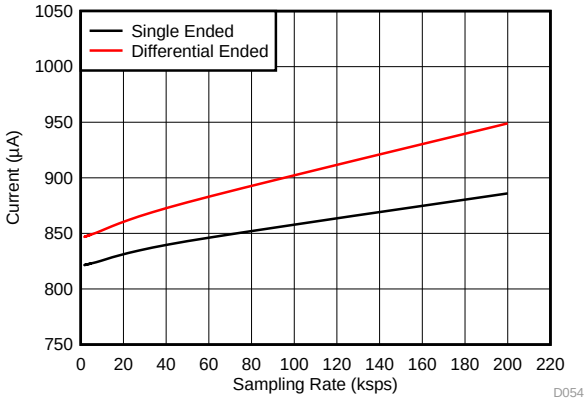


VRSEL = 1 VREF = 2.5 V
REFOUT = 1 ADC14PWRMD = 2
Resolution = 12 Bit

**Figure 5-34. Current vs Sampling Rate**

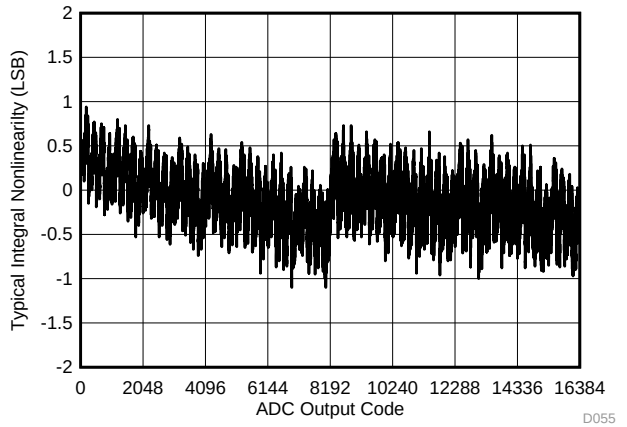


VRSEL = 1 VREF = 2.5 V

Input Mode = Single Ended

**Figure 5-35. INL vs ADC Output Code**

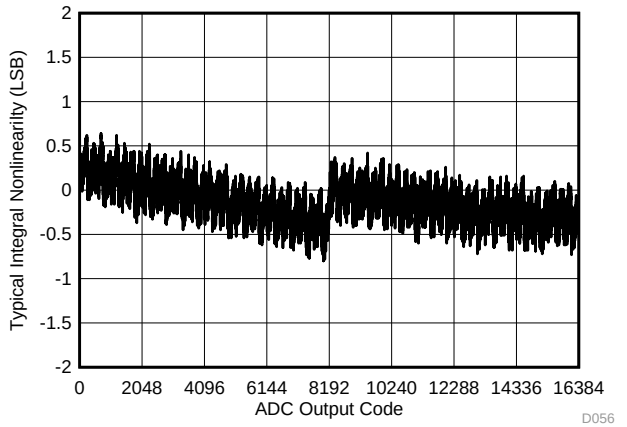


VRSEL = 1 VREF = 2.5 V

Input Mode = Differential

**Figure 5-36. INL vs ADC Output Code**

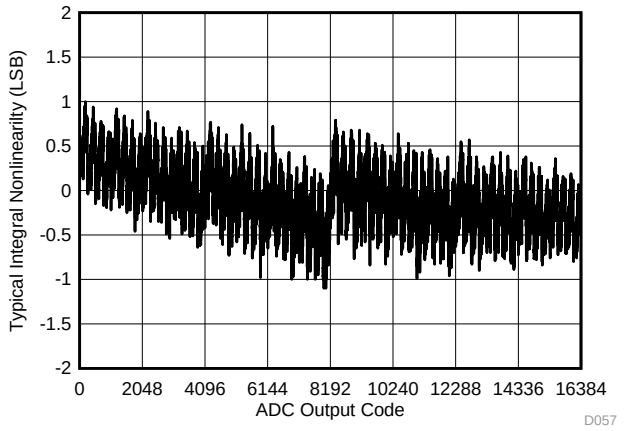


VRSEL = 14 VREF = 2.5 V

Input Mode = Single Ended

**Figure 5-37. INL vs ADC Output Code**

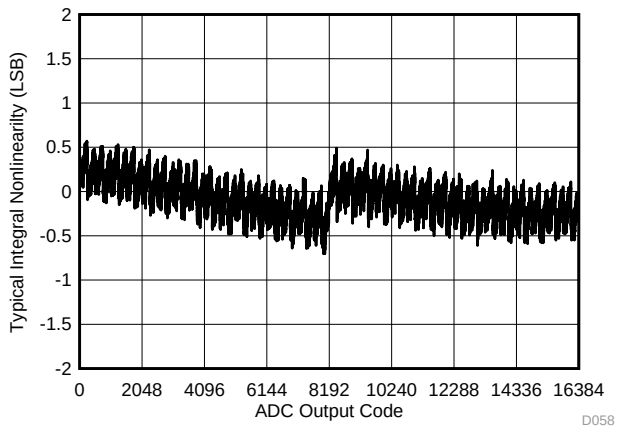


VRSEL = 14 VREF = 2.5 V

Input Mode = Differential

**Figure 5-38. INL vs ADC Output Code**

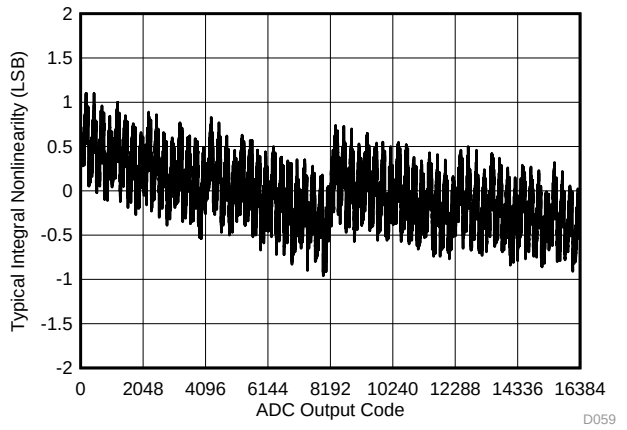


VRSEL = 15 VREF = 2.5 V

Input Mode = Single Ended

**Figure 5-39. INL vs ADC Output Code**

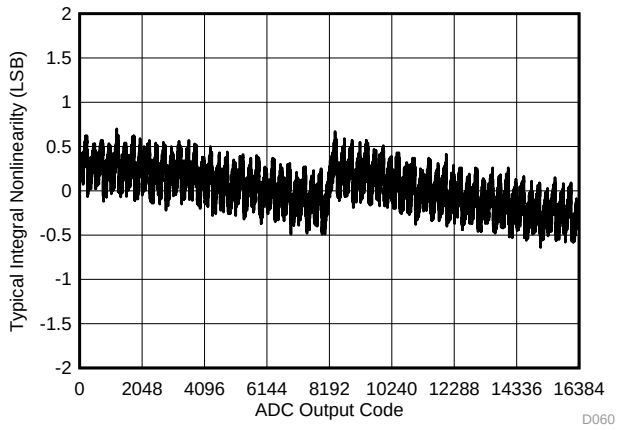


VRSEL = 15 VREF = 2.5 V

Input Mode = Differential

**Figure 5-40. INL vs ADC Output Code**


Copyright © 2015–2016, Texas Instruments Incorporated

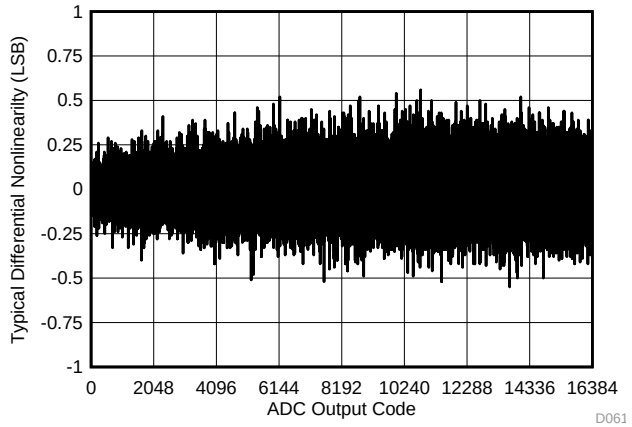


VRSEL = 1 VREF = 2.5 V
Input Mode = Single Ended

**Figure 5-41. DNL vs ADC Output Code**

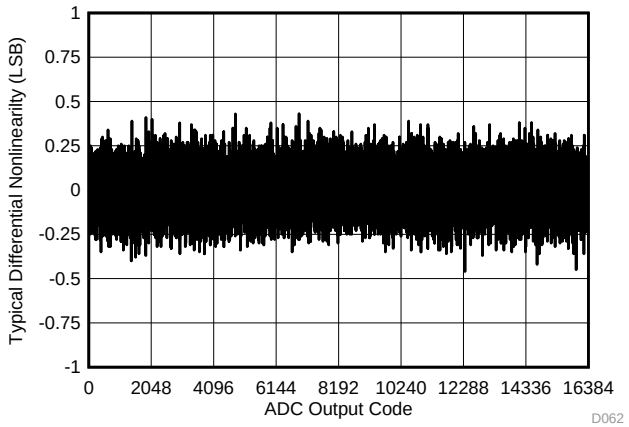


VRSEL = 1 VREF = 2.5 V
Input Mode = Differential

**Figure 5-42. DNL vs ADC Output Code**

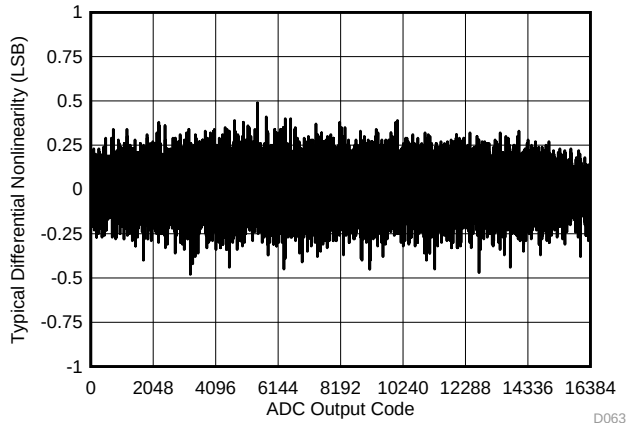


VRSEL = 14 VREF = 2.5 V
Input Mode = Single Ended

**Figure 5-43. DNL vs ADC Output Code**

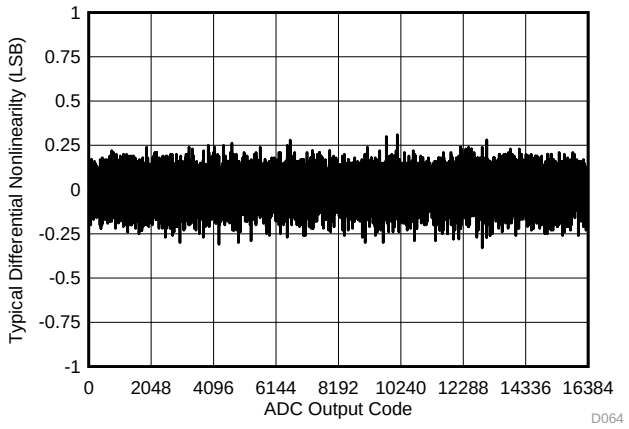


VRSEL = 14 VREF = 2.5 V
Input Mode = Differential

**Figure 5-44. DNL vs ADC Output Code**

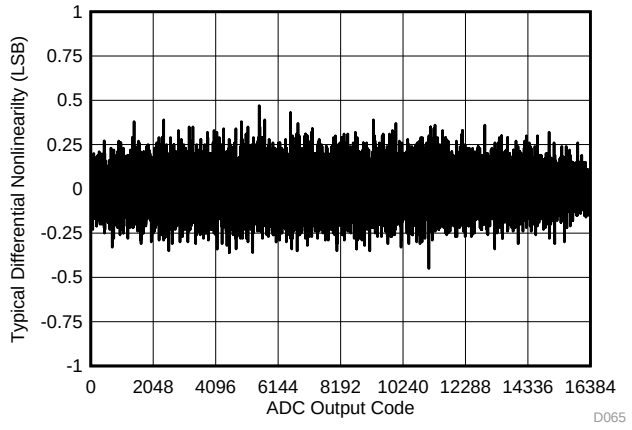


VRSEL = 15 VREF = 2.5 V
Input Mode = Single Ended

**Figure 5-45. DNL vs ADC Output Code**

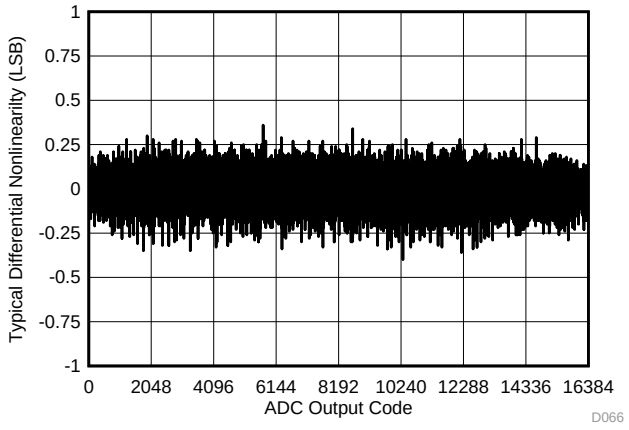


VRSEL = 15 VREF = 2.5 V
Input Mode = Differential

**Figure 5-46. DNL vs ADC Output Code**

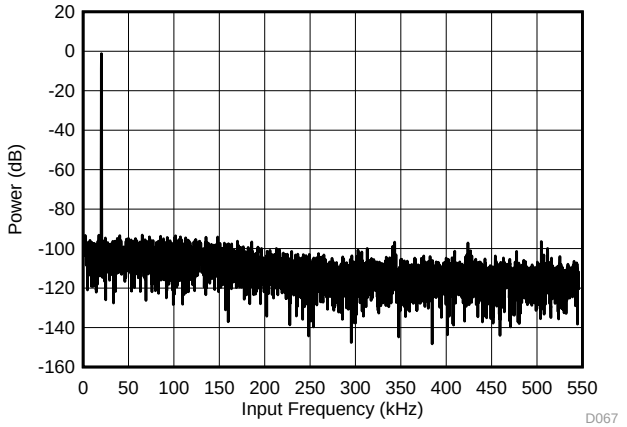


$f_{in}$ = 20 kHz
VREF = 2.5 V
THD = -86 dB
VRSEL = 1
SINAD = 69 dB
Input Mode = Single Ended

**Figure 5-47. Power vs Input Frequency**

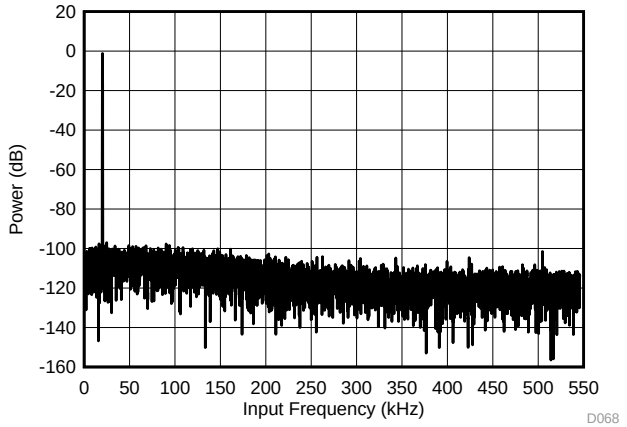


$f_{in}$ = 20 kHz
VREF = 2.5 V
THD = -91 dB
VRSEL = 1
SINAD = 74 dB
Input Mode = Differential

**Figure 5-48. Power vs Input Frequency**

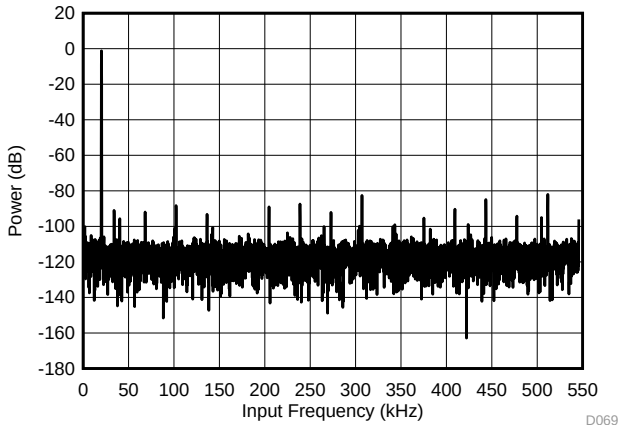


$f_{in}$ = 20 kHz
VREF = 2.5 V
THD = -92 dB
VRSEL = 14
SINAD = 73 dB
Input Mode = Single Ended

**Figure 5-49. Power vs Input Frequency**

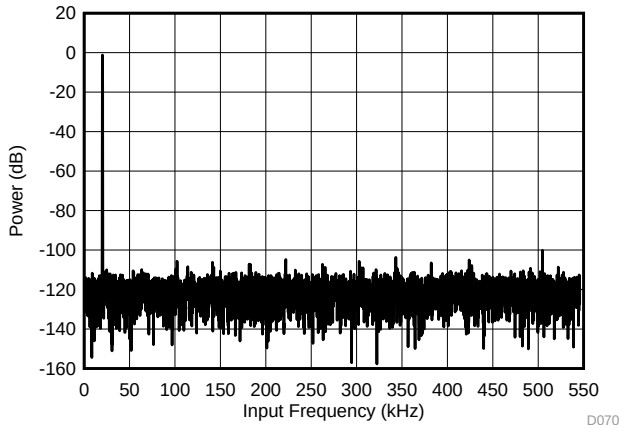


$f_{in}$ = 20 kHz
VREF = 2.5 V
THD = -100 dB
VRSEL = 14
SINAD = 82 dB
Input Mode = Differential

**Figure 5-50. Power vs Input Frequency**

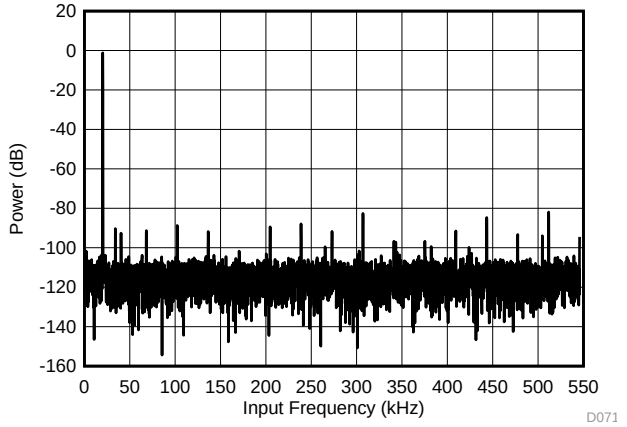


$f_{in}$ = 20 kHz
VREF = 2.5 V
THD = -90 dB
VRSEL = 15
SINAD = 72 dB
Input Mode = Single Ended

**Figure 5-51. Power vs Input Frequency**

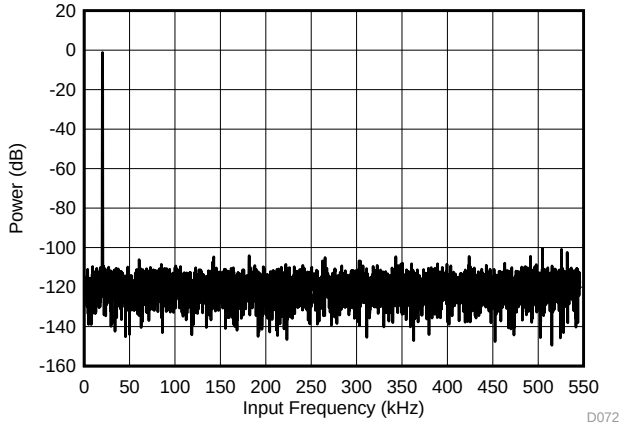


$f_{in}$ = 20 kHz
VREF = 2.5 V
THD = -100 dB
VRSEL = 15
SINAD = 80 dB
Input Mode = Differential

**Figure 5-52. Power vs Input Frequency**


Copyright © 2015–2016, Texas Instruments Incorporated

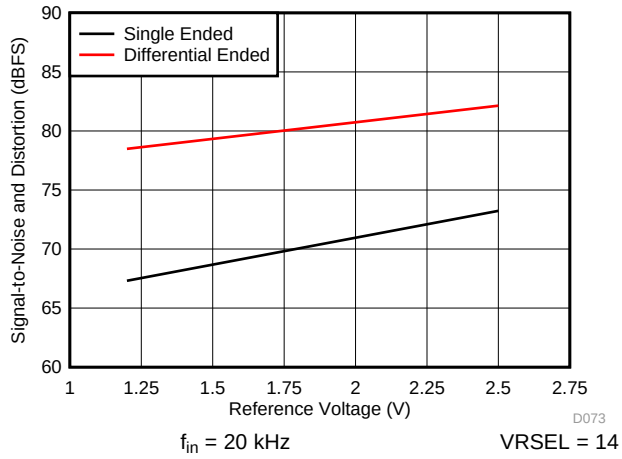


$f_{in}$ = 20 kHz VRSEL = 14

**Figure 5-53. SINAD vs Reference Voltage**

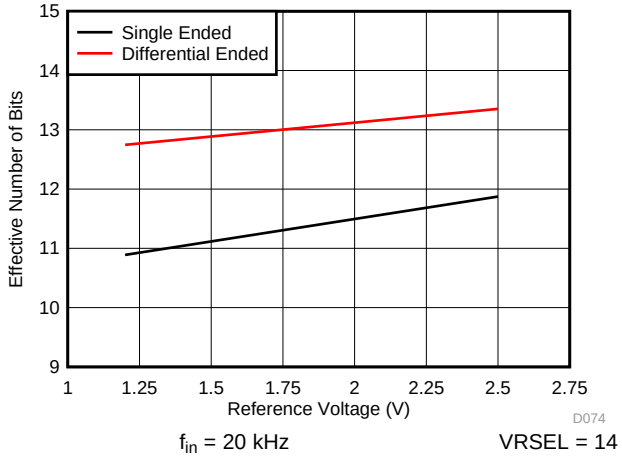


$f_{in}$ = 20 kHz VRSEL = 14

**Figure 5-54. ENOB vs Reference Voltage**

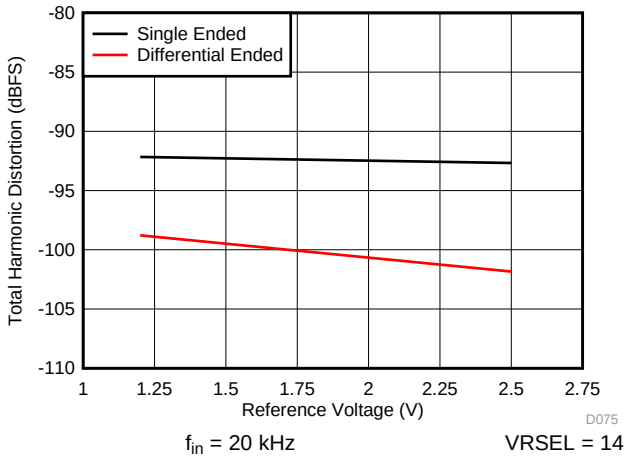


$f_{in}$ = 20 kHz VRSEL = 14

**Figure 5-55. THD vs Reference Voltage**

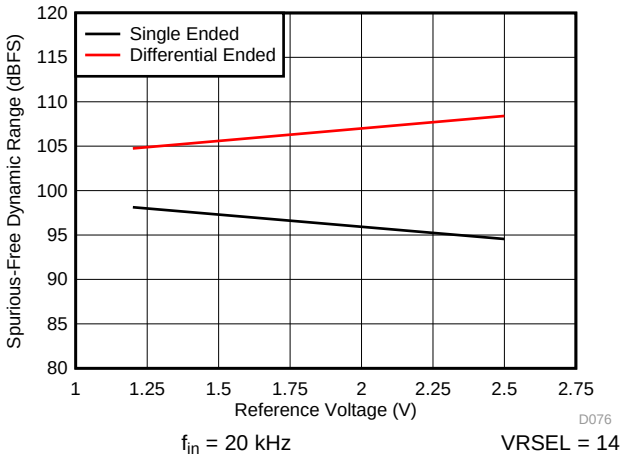


$f_{in}$ = 20 kHz VRSEL = 14

**Figure 5-56. SFDR vs Reference Voltage**

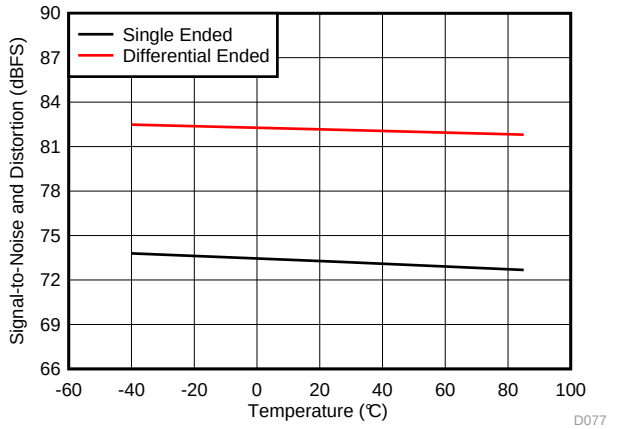


$f_{in}$ = 20 kHz VRSEL = 14 VREF = 2.5 V

**Figure 5-57. SINAD vs Temperature**

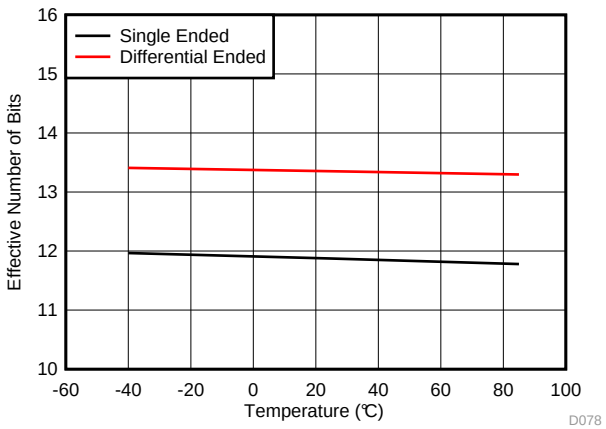


$f_{in}$ = 20 kHz VRSEL = 14 VREF = 2.5 V

**Figure 5-58. ENOB vs Temperature**

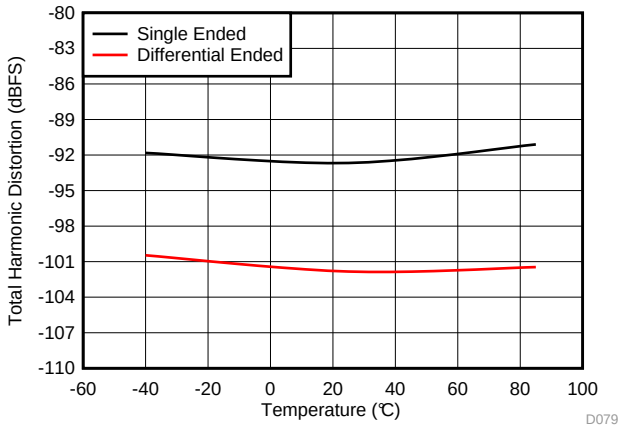


$f_{in}$ = 20 kHz VRSEL = 14 VREF = 2.5 V

**Figure 5-59. THD vs Temperature**

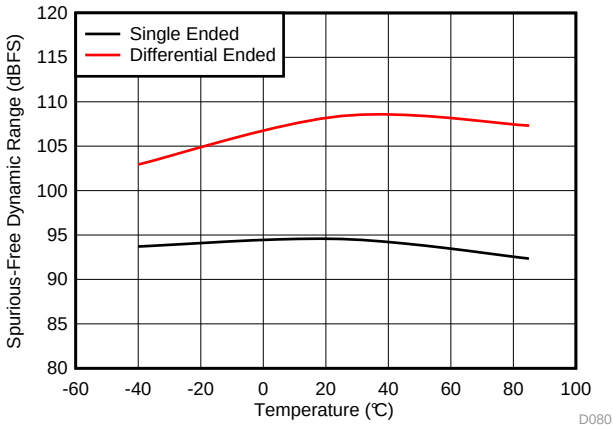


$f_{in}$ = 20 kHz VRSEL = 14 VREF = 2.5 V

**Figure 5-60. SFDR vs Temperature**


Copyright © 2015–2016, Texas Instruments Incorporated

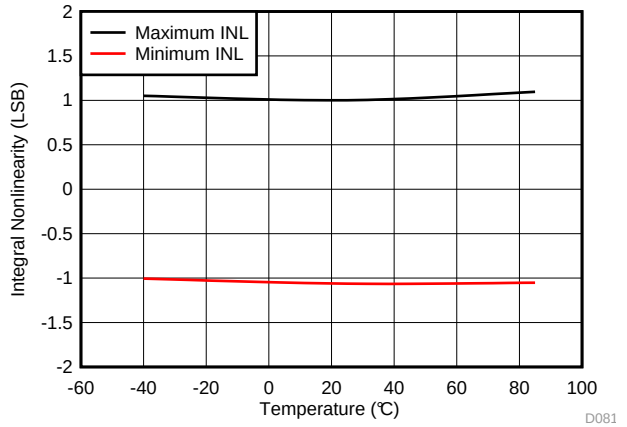


VRSEL = 14 VREF = 2.5 V
Input Mode = Single Ended

**Figure 5-61. INL vs Temperature**

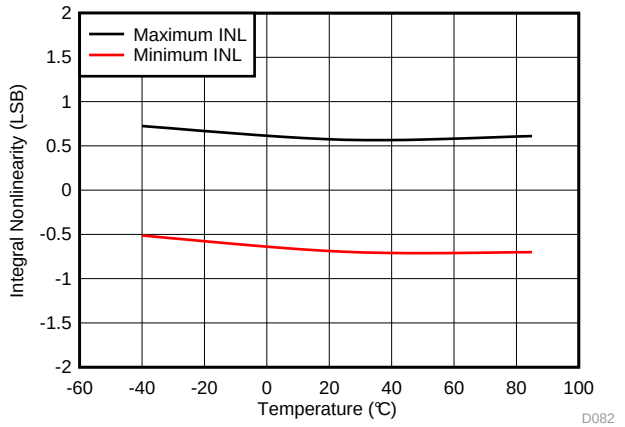


VRSEL = 14 VREF = 2.5 V
Input Mode = Differential

**Figure 5-62. INL vs Temperature**

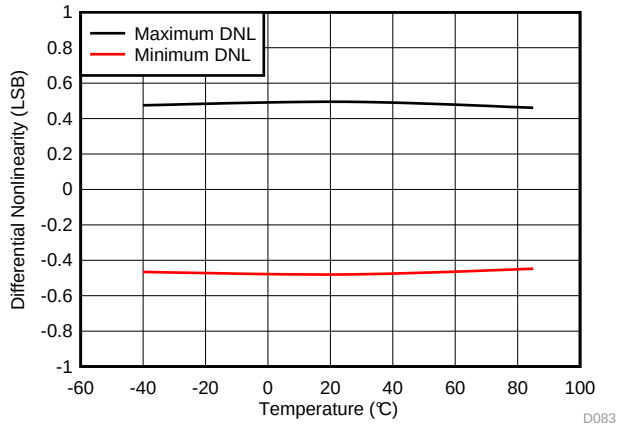


VRSEL = 14 VREF = 2.5 V
Input Mode = Single Ended

**Figure 5-63. DNL vs Temperature**

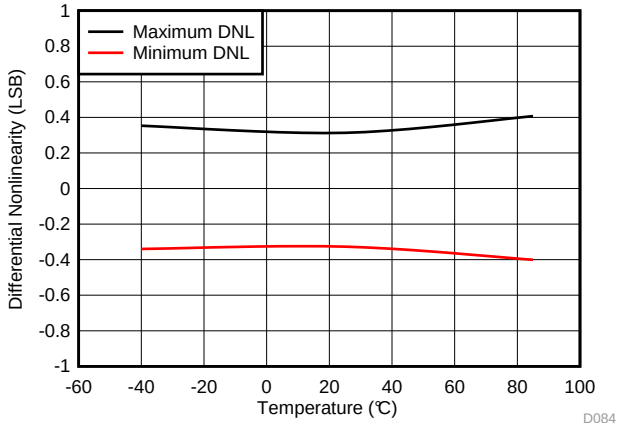


VRSEL = 14 VREF = 2.5 V
Input Mode = Differential

**Figure 5-64. DNL vs Temperature**

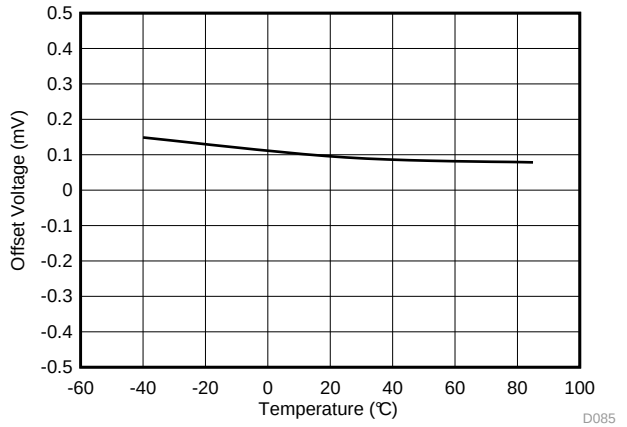


VRSEL = 14 VREF = 2.5 V

Input Mode = Single Ended

**Figure 5-65. Offset Voltage vs Temperature**

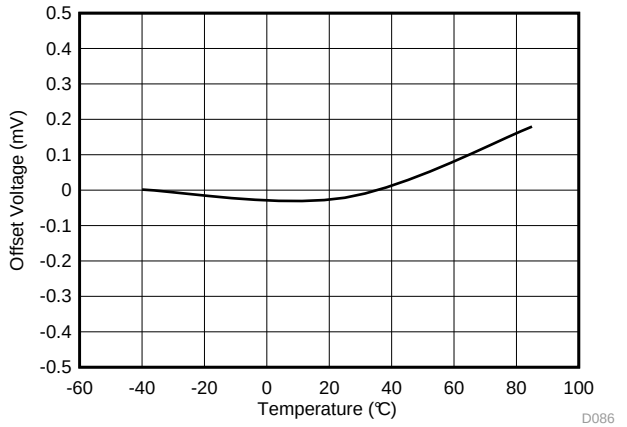


VRSEL = 14 VREF = 2.5 V

Input Mode = Differential

**Figure 5-66. Offset Voltage vs Temperature**

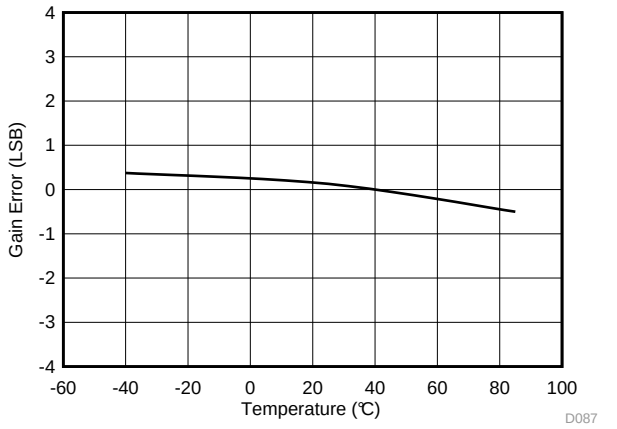


VRSEL = 14 VREF = 2.5 V

Input Mode = Single Ended

**Figure 5-67. Gain Error vs Temperature**

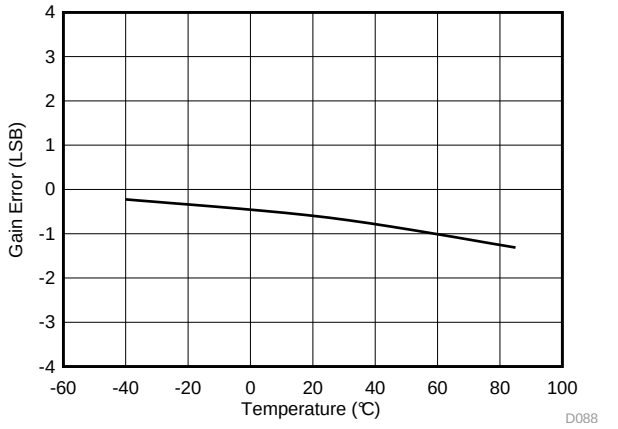


VRSEL = 14 VREF = 2.5 V

Input Mode = Differential

**Figure 5-68. Gain Error vs Temperature**


Copyright © 2015–2016, Texas Instruments Incorporated

### 5.24.7 REF_A

Table 5-33 lists the characteristics of the REF_A built-in reference.

**Table 5-33. REF_A, Built-In Reference *(LDO Operation)***

over recommended ranges of supply voltage and operating free-air temperature (unless otherwise noted)

| PARAMETER | | TEST CONDITIONS | $V_{CC}$ | MIN | TYP | MAX | UNIT |
|---|---|---|---|---|---|---|---|
| $V_{REF+}$ | Positive built-in reference voltage output | REFVSEL = {0} for 1.2 V, REFON = 1 | 1.62 V | | 1.2 | ±1% | V |
| | | REFVSEL = {1} for 1.45 V, REFON = 1 | 1.75 V | | 1.45 | ±1% | |
| | | REFVSEL = {3} for 2.5 V, REFON = 1 | 2.8 V | | 2.5 | ±1% | |
| $AV_{CC(min)}$ | AVCC minimum voltage, Positive built-in reference active | REFVSEL = {0} for 1.2 V | | 1.62 | | | V |
| | | REFVSEL = {1} for 1.45 V | | 1.75 | | | |
| | | REFVSEL = {3} for 2.5 V | | 2.8 | | | |
| $I_{REF+}$ | Operating supply current into AVCC terminal(1) | REFON = 1 | 3 V | | 15 | 20 | µA |
| $I_{O(VREF+)}$ | VREF maximum load current, VREF+ terminal | REFVSEL = {0, 1, 3}, $AV_{CC}$ = $AV_{CC\ (min)}$ for each reference level, REFON = REFOUT = 1 | | –1000 | | +10 | µA |
| $I_{L(VREF+)}$ | Load-current regulation, VREF+ terminal | REFVSEL = {0, 1, 3}, I(VREF+) = +10 µA or –1000 µA, $AV_{CC}$ = $AV_{CC\ (min)}$ for each reference level, REFON = REFOUT = 1 | | | | 2500 | µV/mA |
| $C_{VREF\pm}$ | Capacitance at VREF+, VREF- terminals | REFON = REFOUT = 1 | | 0 | | 100 | pF |
| $PSRR_DC_{REFOUT0}$ | Power supply rejection ratio (DC) after ADC buffer | $AV_{CC}$ = $AV_{CC\ (min)}$ for each reference level, REFVSEL = {0, 1, 3}, REFON = 1, REFOUT = 0 | | | 50 | 350 | µV/V |
| $PSRR_DC_{REFOUT1}$ | Power supply rejection ratio (DC) after ADC buffer | $AV_{CC}$ = $AV_{CC\ (min)}$ for each reference level, REFVSEL = {0, 1, 3}, REFON = 1, REFOUT = 1 | | | 50 | 250 | µV/V |
| $PSRR_AC_{REFOUT0}$ | Power supply rejection ratio (AC) after ADC buffer | $AV_{CC}$ = $AV_{CC\ (min)}$ for each reference level, dAVCC = 0.1 V at 1 kHz, REFVSEL = {0, 1, 3}, REFON = 1, REFOUT = 0 | | | 2 | 10 | mV/V |
| $PSRR_AC_{REFOUT1}$ | Power supply rejection ratio (AC) after ADC buffer | $AV_{CC}$ = $AV_{CC\ (min)}$ for each reference level, dAVCC = 0.1 V at 1 kHz, REFVSEL = {0, 1, 3}, REFON = 1, REFOUT = 1 | | | 2 | 5 | mV/V |
| $TC_{REF+}$ (2) | Temperature coefficient of built-in reference | REFVSEL = {0, 1, 3}, REFON = 1, $T_A$ = –40°C to 85°C | | | 10 | 25 | ppm/°C |
| $t_{SETTLE}$ | Settling time of reference voltage(3) | $AV_{CC}$ = $AV_{CC\ (min)}$ to $AV_{CC(max)}$ REFVSEL = {0, 1, 3}, REFON = 0 → 1 | | | 70 | 80 | µs |

(1) The internal reference current is supplied from terminal AVCC.
(2) Calculated using the box method: (MAX(–40°C to 85°C) – MIN(–40°C to 85°C)) / MIN(–40°C to 85°C)/(85°C – (–40°C)).
(3) The condition is that the error in a ADC conversion started after $t_{SETTLE}$ is less than ±0.5 LSB.

### 5.24.8 Comparator_E

Table 5-34 lists the characteristics of the comparator.

**Table 5-34. Comparator_E**

over recommended ranges of supply voltage and operating free-air temperature (unless otherwise noted)

| PARAMETER | | TEST CONDITIONS | $V_{CC}$ | MIN | TYP | MAX | UNIT |
|---|---|---|---|---|---|---|---|
| $V_{CC}$ | Supply voltage | | | 1.62 | | 3.7 | V |
| $I_{AVCC_COMP}$ | Comparator operating supply current into AVCC, Excludes reference resistor ladder | CEPWRMD = 00, CEON = 1, CERSx = 00 (fast) | 2.2 V, 3 V | | 10 | 15 | µA |
| | | CEPWRMD = 01, CEON = 1, CERSx = 00 (medium) | 2.2 V, 3 V | | 8 | 10 | |
| | | CEPWRMD = 10, CEON = 1, CERSx = 00 (slow), $T_A$ = 30°C | 2.2 V, 3 V | | | 0.5 | |
| | | CEPWRMD = 10, CEON = 1, CERSx = 00 (slow), $T_A$ = 85°C | 2.2 V, 3 V | | | 0.5 | |
| $I_{AVCC_REF}$ | Quiescent current of resistor ladder into AVCC, Includes REF_A module current | CEREFACC = 0, CEREFLx = 01, CERSx = 10, REFON = 0, CEON = 0 | 2.2 V, 3 V | | 25 | 35 | µA |
| | | CEREFACC = 1, CEREFLx = 01, CERSx = 10, REFON = 0, CEON = 0 | 2.2 V, 3 V | | 10 | 15 | |
| $V_{REF}$ | Reference voltage level | CERSx = 11, CEREFLx = 01, CEREFACC = 0 | 1.62 V | 1.17 | 1.2 | 1.23 | V |
| | | CERSx = 11, CEREFLx = 10, CEREFACC = 0 | 2.2 V | 1.95 | 2.0 | 2.05 | |
| | | CERSx = 11, CEREFLx = 11, CEREFACC = 0 | 2.7 V | 2.40 | 2.5 | 2.60 | |
| | | CERSx = 11, CEREFLx = 01, CEREFACC = 1 | 1.62 V | 1.15 | 1.2 | 1.23 | |
| | | CERSx = 11, CEREFLx = 10, CEREFACC = 1 | 2.2 V | 1.92 | 2.0 | 2.05 | |
| | | CERSx = 11, CEREFLx = 11, CEREFACC = 1 | 2.7 V | 2.4 | 2.5 | 2.6 | |
| $V_{IC}$ | Common mode input range | | | 0 | | VCC–1 | V |
| $V_{OFFSET}$ | Input offset voltage | CEPWRMD = 00 | | –10 | | +10 | mV |
| | | CEPWRMD = 01 | | –20 | | +20 | |
| | | CEPWRMD = 10 | | –20 | | +20 | |
| $C_{IN}$ | Input capacitance | CEPWRMD = 00 or CEPWRMD = 01 | | | 8 | | pF |
| | | CEPWRMD = 10 | | | 8 | | |
| $R_{SIN}$ | Series input resistance | On (switch closed) | | | 2 | 4 | kΩ |
| | | Off (switch open) | | 50 | | | MΩ |
| $t_{PD}$ | Propagation delay, response time | CEPWRMD = 00, CEF = 0, Overdrive ≥ 20 mV | | | 330 | 550 | ns |
| | | CEPWRMD = 01, CEF = 0, Overdrive ≥ 20 mV | | | 410 | 650 | |
| | | CEPWRMD = 10, CEF = 0, Overdrive ≥ 20 mV | | | | 30 | µs |
| $t_{PD,filter}$ | Propagation delay with filter active | CEPWRMD = 00 or 01, CEF = 1, Overdrive ≥ 20 mV, CEFDLY = 00 | | | 0.6 | 0.9 | µs |
| | | CEPWRMD = 00 or 01, CEF = 1, Overdrive ≥ 20 mV, CEFDLY = 01 | | | 1.1 | 1.6 | |
| | | CEPWRMD = 00 or 01, CEF = 1, Overdrive ≥ 20 mV, CEFDLY = 10 | | | 2 | 3 | |
| | | CEPWRMD = 00 or 01, CEF = 1, Overdrive ≥ 20 mV, CEFDLY = 11 | | | 4 | 6 | |


Copyright © 2015–2016, Texas Instruments Incorporated

## Comparator_E *(continued)*

over recommended ranges of supply voltage and operating free-air temperature (unless otherwise noted)

| PARAMETER | | TEST CONDITIONS | $V_{CC}$ | MIN | TYP | MAX | UNIT |
|---|---|---|---|---|---|---|---|
| $t_{EN_CMP}$ | Comparator enable time | CEON = 0 to 1, CEPWRMD = 00, VIN+, VIN- from pins, Overdrive ≥ 20 mV | | | 0.8 | 1 | µs |
| | | CEON = 0 to 1, CEPWRMD = 01, VIN+, VIN- from pins, Overdrive ≥ 20 mV | | | 0.9 | 1.2 | |
| | | CEON = 0 to 1, CEPWRMD = 10, VIN+, VIN- from pins, Overdrive ≥ 20 mV | | | 15 | 25 | |
| $t_{EN_CMP_VREF}$ | Comparator and reference ladder and reference voltage enable time | CEON = 0 to 1, CEPWRMD = 00, CEREFLx = 10, CERSx = 11, REFON = 0, Overdrive ≥ 20 mV | | | 90 | 120 | µs |
| | | CEON = 0 to 1, CEPWRMD = 01, CEREFLx = 10, CERSx = 11, REFON = 0, Overdrive ≥ 20 mV | | | 90 | 120 | |
| | | CEON = 0 to 1, CEPWRMD = 10, CEREFLx = 10, CERSx = 11, REFON = 0, Overdrive ≥ 20 mV | | | 90 | 120 | |
| | | CEON = 0 to 1, CEPWRMD = 00, CEREFLx = 10, CERSx = 10, REFON = 0, CEREF0/1 = 0x0F, Overdrive ≥ 20 mV | | | 90 | 180 | |
| | | CEON = 0 to 1, CEPWRMD = 01, CEREFLx = 10, CERSx = 10, REFON = 0, CEREF0/1 = 0x0F, Overdrive ≥ 20 mV | | | 90 | 180 | |
| | | CEON = 0 to 1, CEPWRMD = 10, CEREFLx = 10, CERSx = 10, REFON = 0, CEREF0/1 = 0x0F, Overdrive ≥ 20 mV | | | 90 | 180 | |
| $t_{EN_CMP_RL}$ | Comparator and reference ladder enable time | CEON = 0 to 1, CEPWRMD = 00, CEREFLx = 10, CERSx = 10, REFON = 1, CEREF0/1 = 0x0F, Overdrive ≥ 20 mV | | | 1.5 | 2 | µs |
| | | CEON = 0 to 1, CEPWRMD = 01, CEREFLx = 10, CERSx = 10, REFON = 1, CEREF0/1 = 0x0F, Overdrive ≥ 20 mV | | | 1.5 | 2 | |
| | | CEON = 0 to 1, CEPWRMD = 10, CEREFLx = 10, CERSx = 10, REFON = 1, CEREF0/1 = 0x0F, Overdrive ≥ 20 mV | | | 15 | 25 | |
| $V_{CMP_REF}$ | Reference voltage for a given tap | VIN = reference into resistor ladder, n = 0 to 31 | | VIN × (n + 0.9) / 32 | VIN × (n + 1) / 32 | VIN × (n + 1.1) / 32 | V |

### 5.24.9 eUSCI

Table 5-35 lists the supported clock frequencies of the eUSCI in UART mode.

**Table 5-35. eUSCI (UART Mode) Clock Frequency**

| PARAMETER | | TEST CONDITIONS | VCORE | VCC | MIN | MAX | UNIT |
|---|---|---|---|---|---|---|---|
| $f_{eUSCI}$ | eUSCI input clock frequency | Internal: SMCLK<br>External: UCLK<br>Duty cycle = 50% ±10% | 1.2 V | | | 12 | MHz |
| | | | 1.4 V | | | 24 | |
| $f_{BITCLK}$ | BITCLK clock frequency<br>(equals baud rate in MBaud) | | 1.2 V | | | 5 | MHz |
| | | | 1.4 V | | | 7 | |

Table 5-36 lists the characteristics of the eUSCI in UART mode.

**Table 5-36. eUSCI (UART Mode)**

over recommended ranges of supply voltage and operating free-air temperature (unless otherwise noted)

| PARAMETER | | TEST CONDITIONS | $V_{CC}$ | MIN | TYP | MAX | UNIT |
|---|---|---|---|---|---|---|---|
| $t_t$ | UART receive deglitch time (1) | UCGLITx = 0 | | 5 | | 20 | ns |
| | | UCGLITx = 1 | | 20 | | 60 | |
| | | UCGLITx = 2 | | 30 | | 100 | |
| | | UCGLITx = 3 | | 50 | | 150 | |

(1) Pulses on the UART receive input (UCxRX) shorter than the UART receive deglitch time are suppressed. Thus the selected deglitch time can limit the max. useable baud rate. To ensure that pulses are correctly recognized, their duration should exceed the maximum specification of the deglitch time.

Table 5-37 lists the supported clock frequencies of the eUSCI in SPI master mode.

**Table 5-37. eUSCI (SPI Master Mode) Clock Frequency**

| PARAMETER | | CONDITIONS | | $V_{CC}$ | MIN | TYP | MAX | UNIT |
|---|---|---|---|---|---|---|---|---|
| $f_{eUSCI}$ | eUSCI input clock frequency | SMCLK<br>Duty cycle = 50% ±10% | VCORE = 1.2 V | | | | 12 | MHz |
| | | | VCORE = 1.4 V | | | | 24 | |


Copyright © 2015–2016, Texas Instruments Incorporated

Table 5-38 lists the characteristics of the eUSCI in SPI master mode.

**Table 5-38. eUSCI (SPI Master Mode)**

over recommended ranges of supply voltage and operating free-air temperature (unless otherwise noted)[1]

| PARAMETER | | TEST CONDITIONS | $V_{CORE}$ | $V_{CC}$ | MIN | MAX | UNIT |
|---|---|---|---|---|---|---|---|
| $t_{STE,LEAD}$ | STE lead time, STE active to clock | UCSTEM = 1, UCMODEx = 01 or 10 | | | 1 | | UCxCLK cycles |
| $t_{STE,LAG}$ | STE lag time, Last clock to STE inactive | UCSTEM = 1, UCMODEx = 01 or 10 | | | 1 | | UCxCLK cycles |
| $t_{STE,ACC}$ | STE access time, STE active to SIMO data out | UCSTEM = 0, UCMODEx = 01 or 10 | | 1.62 V | | 30 | ns |
| | | | | 3.7 V | | 20 | ns |
| $t_{STE,DIS}$ | STE disable time, STE inactive to SIMO high impedance | UCSTEM = 0, UCMODEx = 01 or 10 | | 1.62 V | | 20 | ns |
| | | | | 3.7 V | | 15 | ns |
| $t_{SU,MI}$ | SOMI input data setup time | | 1.2 V | 1.62 V | 45 | | ns |
| | | | 1.4 V | 3.7 V | 30 | | ns |
| $t_{HD,MI}$ | SOMI input data hold time | | | 1.62 V | 0 | | ns |
| | | | | 3.7 V | 0 | | ns |
| $t_{VALID,MO}$ | SIMO output data valid time[2] | UCLK edge to SIMO valid, $C_L$ = 20 pF | | 1.62 V | | 14 | ns |
| | | | | 3.7 V | | 7 | ns |
| $t_{HD,MO}$ | SIMO output data hold time[3] | $C_L$ = 20 pF | | 1.62 V | 0 | | ns |
| | | | | 3.7 V | 0 | | ns |

(1) $f_{UCxCLK} = 1/2t_{LO/HI}$ with $tL_{O/HI} = \max(t_{VALID,MO(eUSCI)} + t_{SU,SI(Slave)}, t_{SU,MI(eUSCI)} + t_{VALID,SO(Slave)})$.
For the slave parameters $t_{SU,SI(Slave)}$ and $t_{VALID,SO(Slave)}$ refer to the SPI parameters of the attached slave.

(2) Specifies the time to drive the next valid data to the SIMO output after the output changing UCLK clock edge. Refer to the timing diagrams in Figure 5-69 and Figure 5-70.

(3) Specifies how long data on the SIMO output is valid after the output changing UCLK clock edge. Negative values indicate that the data on the SIMO output can become invalid before the output changing clock edge observed on UCLK. Refer to the timing diagrams in Figure 5-69 and Figure 5-70.

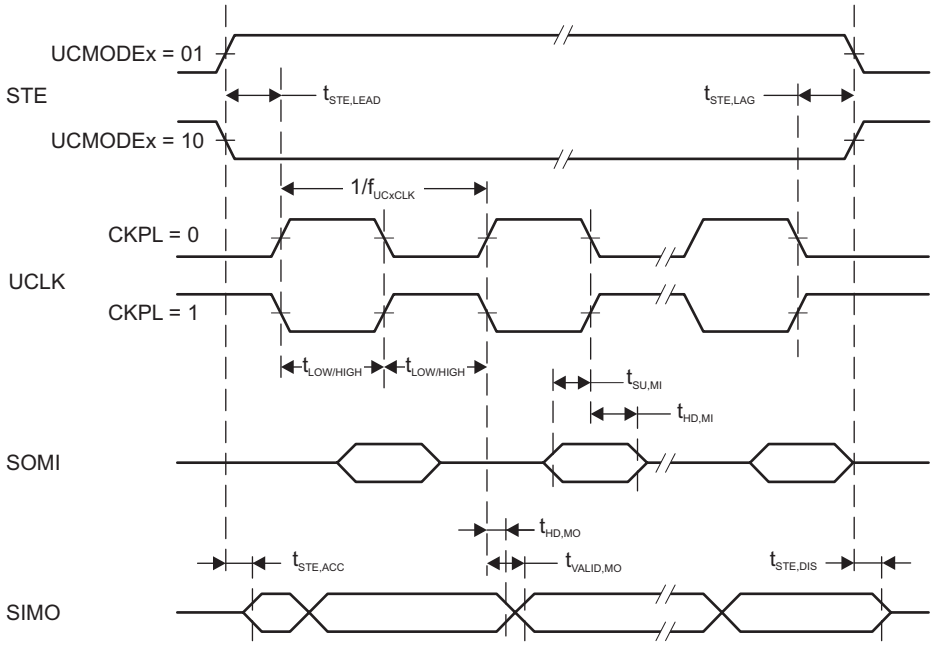


**Figure 5-69. SPI Master Mode, CKPH = 0**

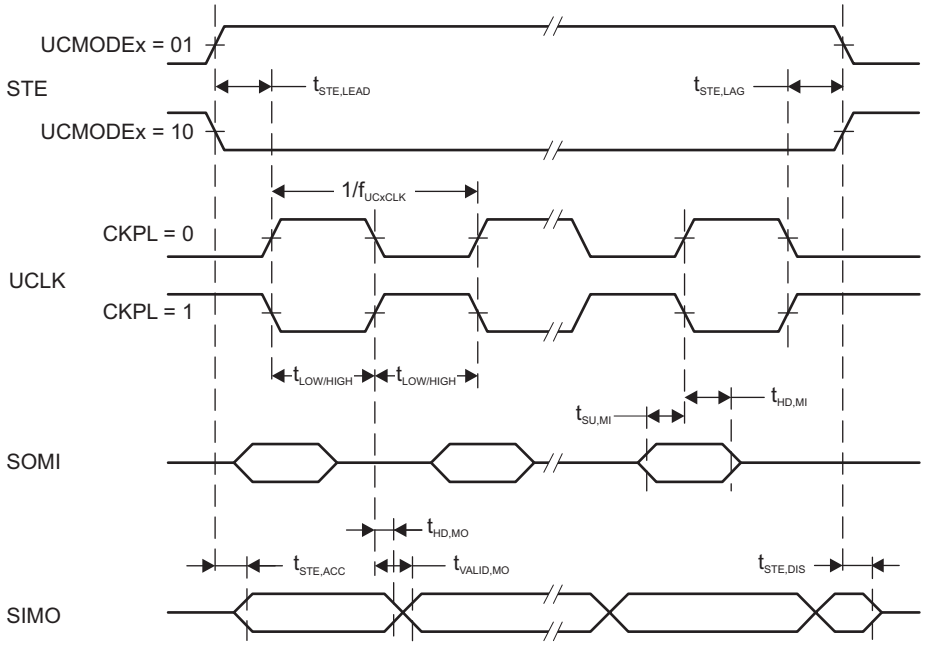


**Figure 5-70. SPI Master Mode, CKPH = 1**


Copyright © 2015–2016, Texas Instruments Incorporated

Table 5-39 lists the characteristics of the eUSCI in SPI slave mode.

**Table 5-39. eUSCI (SPI Slave Mode)**

over recommended ranges of supply voltage and operating free-air temperature (unless otherwise noted) (see Note (1))

| PARAMETER | | TEST CONDITIONS | $V_{CC}$ | MIN | MAX | UNIT |
|---|---|---|---|---|---|---|
| $t_{STE,LEAD}$ | STE lead time, STE active to clock | | 1.62 V | 45 | | ns |
| | | | 3.7 V | 20 | | |
| $t_{STE,LAG}$ | STE lag time, Last clock to STE inactive | | 1.62 V | 1 | | ns |
| | | | 3.7 V | 1 | | |
| $t_{STE,ACC}$ | STE access time, STE active to SOMI data out | | 1.62 V | | 25 | ns |
| | | | 3.7 V | | 15 | |
| $t_{STE,DIS}$ | STE disable time, STE inactive to SOMI high impedance | | 1.62 V | | 18 | ns |
| | | | 3.7 V | | 14 | |
| $t_{SU,SI}$ | SIMO input data setup time | | 1.62 V | 3 | | ns |
| | | | 3.7 V | 2 | | |
| $t_{HD,SI}$ | SIMO input data hold time | | 1.62 V | 0 | | ns |
| | | | 3.7 V | 0 | | |
| $t_{VALID,SO}$ | SOMI output data valid time (2) | UCLK edge to SOMI valid, $C_L$ = 20 pF | 1.62 V | | 35 | ns |
| | | | 3.7 V | | 18 | |
| $t_{HD,SO}$ | SOMI output data hold time (3) | $C_L$ = 20 pF | 1.62 V | 10 | | ns |
| | | | 3.7 V | 6 | | |

(1) $f_{UCxCLK} = 1/2t_{LO/HI}$ with $tL_{O/HI} \geq \max(t_{VALID,MO(Master)} + t_{SU,SI(eUSCI)}, t_{SU,MI(Master)} + t_{VALID,SO(eUSCI)})$.
For the master parameters $t_{SU,MI(Master)}$ and $t_{VALID,MO(Master)}$ refer to the SPI parameters of the attached slave.
(2) Specifies the time to drive the next valid data to the SOMI output after the output changing UCLK clock edge. Refer to the timing diagrams in Figure 5-71 and Figure 5-72.
(3) Specifies how long data on the SOMI output is valid after the output changing UCLK clock edge. Refer to the timing diagrams in Figure 5-71 and Figure 5-72.

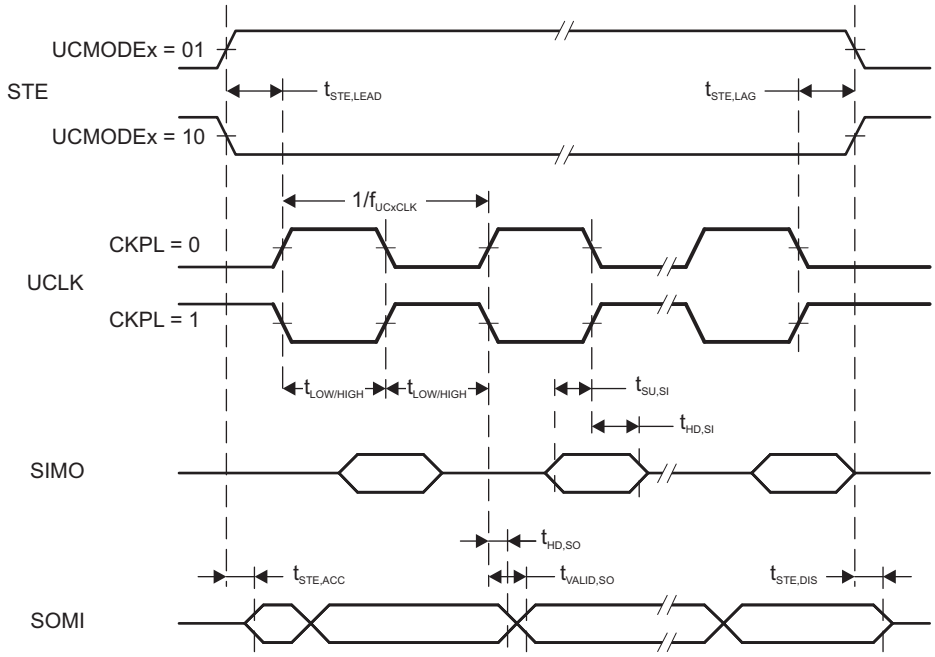


**Figure 5-71. SPI Slave Mode, CKPH = 0**

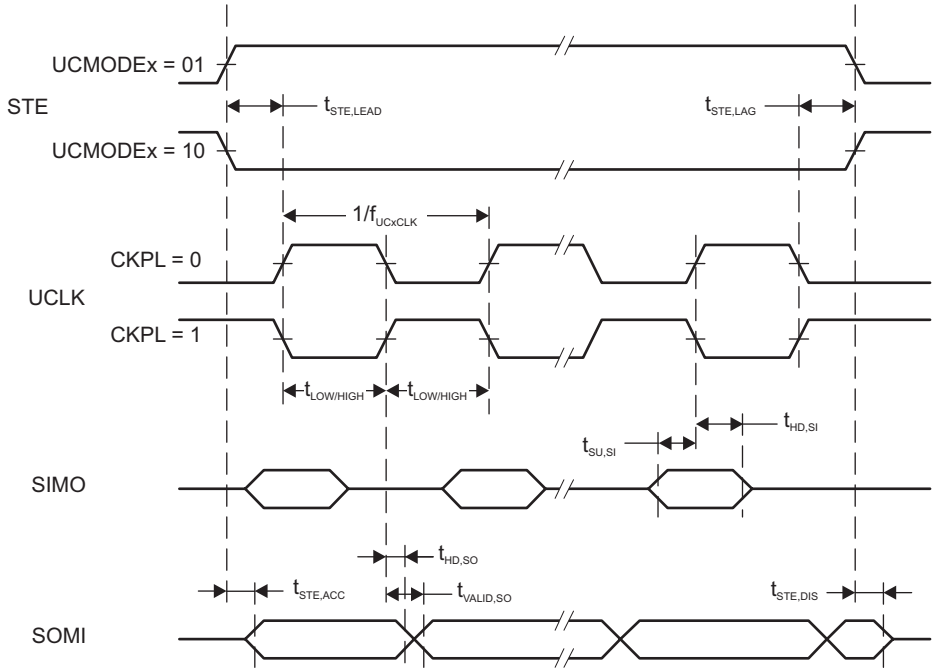


**Figure 5-72. SPI Slave Mode, CKPH = 1**


Copyright © 2015–2016, Texas Instruments Incorporated

Table 5-40 lists the supported clock frequencies of the eUSCI in I²C mode.

**Table 5-40. eUSCI (I²C Mode) Clock Frequency**

| PARAMETER | | TEST CONDITIONS | $V_{CORE}$ | $V_{CC}$ | MIN | MAX | UNIT |
|---|---|---|---|---|---|---|---|
| $f_{eUSCI}$ | eUSCI input clock frequency | Internal: SMCLK<br>External: UCLK<br>Duty cycle = 50% ±10% | 1.2 V | | | 12 | MHz |
| | | | 1.4 V | | | 24 | |
| $f_{SCL}$ | SCL clock frequency | | | | | 1 | MHz |

Table 5-41 lists the characteristics of the eUSCI in I²C mode.

**Table 5-41. eUSCI (I²C Mode)**

over recommended ranges of supply voltage and operating free-air temperature (unless otherwise noted) (see Figure 5-73)

| PARAMETER | | TEST CONDITIONS | MIN | TYP | MAX | UNIT |
|---|---|---|---|---|---|---|
| $t_{HD,STA}$ | Hold time (repeated) START | $f_{SCL}$ = 100 kHz | 5.5 | | | µs |
| | | $f_{SCL}$ = 400 kHz | 1.5 | | | |
| | | $f_{SCL}$ = 1 MHz | 0.6 | | | |
| $t_{SU,STA}$ | Setup time for a repeated START | $f_{SCL}$ = 100 kHz | 5.5 | | | µs |
| | | $f_{SCL}$ = 400 kHz | 1.5 | | | |
| | | $f_{SCL}$ = 1 MHz | 0.6 | | | |
| $t_{HD,DAT}$ | Data hold time | $f_{SCL}$ = 100 kHz | 80 | | | ns |
| | | $f_{SCL}$ = 400 kHz | 80 | | | |
| | | $f_{SCL}$ = 1 MHz | 80 | | | |
| $t_{SU,DAT}$ | Data setup time | $f_{SCL}$ = 100 kHz | 5.5 | | | µs |
| | | $f_{SCL}$ = 400 kHz | 1.5 | | | |
| | | $f_{SCL}$ = 1 MHz | 0.6 | | | |
| $t_{SU,STO}$ | Setup time for STOP | $f_{SCL}$ = 100 kHz | 5.5 | | | µs |
| | | $f_{SCL}$ = 400 kHz | 1.5 | | | |
| | | $f_{SCL}$ = 1 MHz | 0.6 | | | |
| $t_{SP}$ | Pulse duration of spikes suppressed by input filter | UCGLITx = 0 | 50 | | 120 | ns |
| | | UCGLITx = 1 | 25 | | 60 | |
| | | UCGLITx = 2 | 10 | | 35 | |
| | | UCGLITx = 3 | 5 | | 20 | |
| $t_{TIMEOUT}$ | Clock low time-out | UCCLTOx = 1 | | 27 | | ms |
| | | UCCLTOx = 2 | | 30 | | |
| | | UCCLTOx = 3 | | 33 | | |

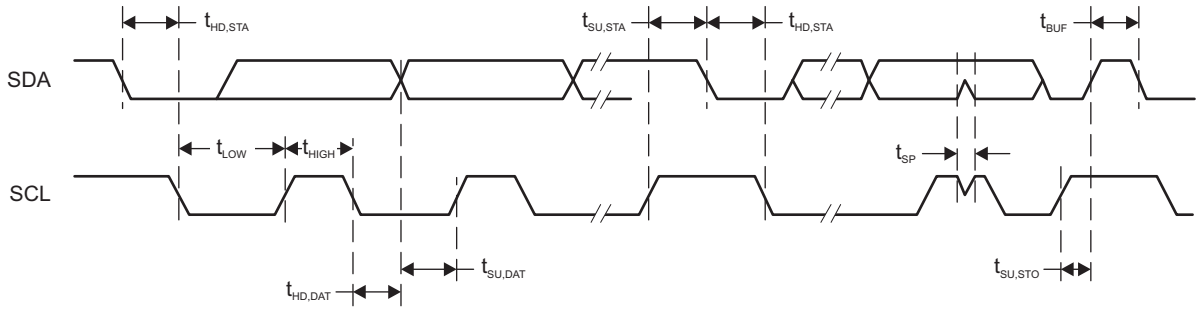


**Figure 5-73. I²C Mode Timing**

### 5.24.10 Timers

Table 5-42 lists the characteristics of Timer_A.

**Table 5-42. Timer_A**

over recommended ranges of supply voltage and operating free-air temperature (unless otherwise noted)

| PARAMETER | | TEST CONDITIONS | $V_{CORE}$ | $V_{CC}$ | MIN | MAX | UNIT |
|---|---|---|---|---|---|---|---|
| $f_{TA}$ | Timer_A input clock frequency | Internal: SMCLK<br>External: TACLK<br>Duty cycle = 50% ±10% | 1.2 V | | | 12 | MHz |
| | | | 1.4 V | | | 24 | |
| $t_{TA,cap}$ | Timer_A capture timing | All capture inputs,<br>Minimum pulse duration required for capture | | | 20 | | ns |

Table 5-43 lists the characteristics of Timer32.

**Table 5-43. Timer32**

over recommended ranges of supply voltage and operating free-air temperature (unless otherwise noted)

| PARAMETER | | TEST CONDITIONS | $V_{CORE}$ | $V_{CC}$ | MIN | MAX | UNIT |
|---|---|---|---|---|---|---|---|
| $f_{T32}$ | Timer32 operating clock frequency(1) | | 1.2 V | | | 24 | MHz |
| | | | 1.4 V | | | 48 | |

(1) Timer32 operates on the same clock as the Cortex-M4 CPU.


Copyright © 2015–2016, Texas Instruments Incorporated

### 5.24.11 Memories

Table 5-44 lists the general characteristics of the flash memory.

**Table 5-44. Flash Memory**

over recommended ranges of supply voltage and operating free-air temperature (unless otherwise noted)

| PARAMETER | | MIN | MAX | UNIT |
|---|---|---|---|---|
| $DVCC_{PGM/ERS}$ | Supply voltage for program or erase | 1.62 | 3.7 | V |
| $I_{PGM/ERS, PEAK}$ | Peak supply current from DVCC during program or erase | | 10 | mA |
| $N_{Endurance}$ | Program or erase endurance (1) | 20000 | | cycles |
| $t_{Retention}$ | Data retention duration | 20 | | years |

(1) Program or erase cycle for a bit is defined as the value of bit changing from 1 to 0 to 1.

Table 5-45 lists the characteristics of the flash operations using MSP432 peripheral driver libraries.

**Table 5-45. Flash Operations Using MSP432 Peripheral Driver Libraries (1)**

over recommended ranges of supply voltage and operating free-air temperature (unless otherwise noted)

| PARAMETER | | TEST CONDITIONS | MIN | TYP | MAX | UNIT |
|---|---|---|---|---|---|---|
| $t_{PGM_API, Word}$ | Program time for 32-bit data using ROM_FlashCtl_programMemory() API | VCORE = 1.4 V, MCLK = 48 MHz | | 40 | 275 | µs |
| $t_{PGM_API, Sector}$ | Program time for 4kB data (one sector) using ROM_FlashCtl_programMemory() API | VCORE = 1.4 V, MCLK = 48 MHz | | 4.5 | 71 | ms |
| $t_{ERS_API, Sector}$ | Sector erase time using ROM_FlashCtl_eraseSector() API | VCORE = 1.4 V, MCLK = 48 MHz, Number of erase or program cycles <1k | | 9 | 309 (2) | ms |
| | | VCORE = 1.4 V, MCLK = 48 MHz, Number of erase or program cycles >1k and <20k | | 9 | 3035 (2) | |
| $t_{ERS_API, Mass-Erase}$ | Mass erase time using ROM_FlashCtl_performMassErase() API | VCORE = 1.4 V, MCLK = 48 MHz, Number of erase or program cycles <1k, MSP432P401R devices with 256KB of flash memory | | 12 | 19800 (3) | ms |
| | | VCORE = 1.4 V, MCLK = 48 MHz, Number of erase or program cycles <1k, MSP432P401M devices with 128KB of flash memory | | 12 | 9900 (3) | ms |
| $I_{AVGPGM_API}$ | Average supply current from DVCC during program using ROM_FlashCtl_programMemory() API | VCORE = 1.2 V, MCLK = 3 MHz | | 5 | 7 | mA |
| $I_{AVGERS_API}$ | Average supply current from DVCC during erase using ROM_FlashCtl_eraseSector() API | VCORE = 1.2 V, MCLK = 3 MHz | | 2 | 3 | mA |

(1) MSP432 peripheral driver libraries executed from ROM.
(2) The max value is theoretically calculated by multiplying the typical value by $N_{MAX_ERS}$ for the specific erase or program endurance.
(3) The max value is theoretically calculated by multiplying the typical value by $N_{MAX_ERS}$ for the specific erase or program endurance and the total number of sectors in the flash main memory.

Table 5-46 lists the characteristics of the flash stand-alone operations.

### Table 5-46. Flash Stand-Alone Operations

over recommended ranges of supply voltage and operating free-air temperature (unless otherwise noted)

| PARAMETER | | TEST CONDITIONS | MIN | TYP | MAX | UNIT |
|---|---|---|---|---|---|---|
| $t_{PGM,\ Immediate}$ | Program time for one 32-bit data using immediate write mode | VER_PRE = 0, VER_PST = 1 | | 40 | | µs |
| | | VER_PRE = 1, VER_PST = 1 | | 60 | | |
| $t_{PGM,\ Full\text{-}word}$ | Program time for one 128-bit word using full word write mode | VER_PRE = 0, VER_PST = 1 | | 40 | | µs |
| | | VER_PRE = 1, VER_PST = 1 | | 60 | | |
| $t_{PGM,\ Burst}$ | Program time for 4×128-bit burst using burst write mode | AUTO_PRE = 0, AUTO_PST = 1 | | 65 | | µs |
| | | AUTO_PRE = 1, AUTO_PST = 1 | | 85 | | |
| $t_{ERS}$ | Time for sector erase or mass erase | | | 9 | | ms |
| $N_{MAX_PGM}$ | Maximum number of pulses to complete program operation | | | | 5 | |
| $N_{MAX_ERS}$ | Maximum number of pulses to complete erase operation | Number of erase or program cycles <1k | | | 34 | |
| | | Number of erase or program cycles >1k and <20k | | | 334 | |

Table 5-47 lists the characteristics of the SRAM.

### Table 5-47. SRAM

over recommended ranges of supply voltage and operating free-air temperature (unless otherwise noted)

| PARAMETER | | TEST CONDITIONS | MIN | TYP | MAX | UNIT |
|---|---|---|---|---|---|---|
| $I_{SRAM_EN}$ | Current consumption of one SRAM bank when enabled | VCORE = 1.2 V | | 100 | 3500 | nA |
| | | VCORE = 1.4 V | | 300 | 5500 | |
| $I_{SRAM_RET}$ | Current consumption of one SRAM bank under retention | VCORE = 1.2 V | | 30 | 1250 | nA |
| | | VCORE = 1.4 V | | 35 | 1200 | |
| $t_{SRAM_EN,\ one}$ | Time taken to enable one SRAM bank | | | 4 | 5 | µs |
| $t_{SRAM_DIS,\ one}$ | Time taken to disable one SRAM bank | | | 4 | 5 | µs |
| $t_{SRAM_EN,\ all}$ | Time taken to enable all SRAM banks except Bank 0 | | | 7 | 8 | µs |
| $t_{SRAM_DIS,\ all}$ | Time taken to disable all SRAM banks except Bank 0 | | | 4 | 5 | µs |


Copyright © 2015–2016, Texas Instruments Incorporated

### 5.24.12 Emulation and Debug

Table 5-48 lists the characteristics of the JTAG interface.

**Table 5-48. JTAG**

over recommended ranges of supply voltage and operating free-air temperature (unless otherwise noted)

| PARAMETER | | MIN | TYP | MAX | UNIT |
|---|---|---|---|---|---|
| $f_{TCK}$ | TCK clock frequency | 0 | | 10 | MHz |
| $t_{TCK}$ | TCK clock period | 100 | | | ns |
| $t_{TCK_LOW}$ | TCK clock low time | | $t_{TCK}/2$ | | ns |
| $t_{TCK_HIGH}$ | TCK clock high time | | $t_{TCK}/2$ | | ns |
| $t_{TCK_RISE}$ | TCK rise time | 0 | | 10 | ns |
| $t_{TCK_FALL}$ | TCK fall time | 0 | | 10 | ns |
| $t_{TMS_SU}$ | TMS setup time to TCK rise | 30 | | | ns |
| $t_{TMS_HLD}$ | TMS hold time from TCK rise | 9 | | | ns |
| $t_{TDI_SU}$ | TDI setup time to TCK rise | 20 | | | ns |
| $t_{TDI_HLD}$ | TDI hold time from TCK rise | 7 | | | ns |
| $t_{TDO_ZDV}$ | TCK fall to data valid from high impedance | | 9 | 44 | ns |
| $t_{TDO_DV}$ | TCK fall to data valid from data valid | | 9 | 44 | ns |
| $t_{TDO_DVZ}$ | TCK fall to high impedance from data valid | | 8 | 38 | ns |

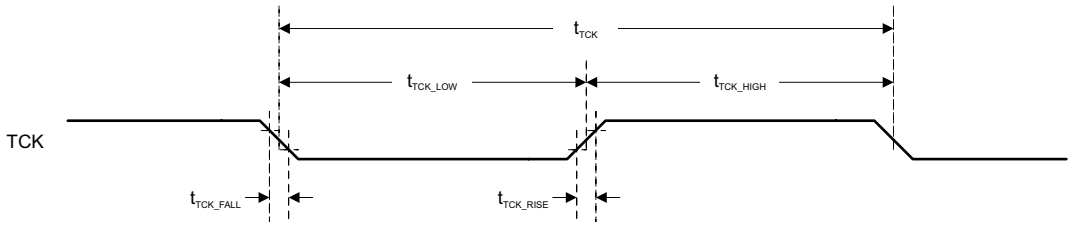


**Figure 5-74. JTAG Test Clock Input Timing**

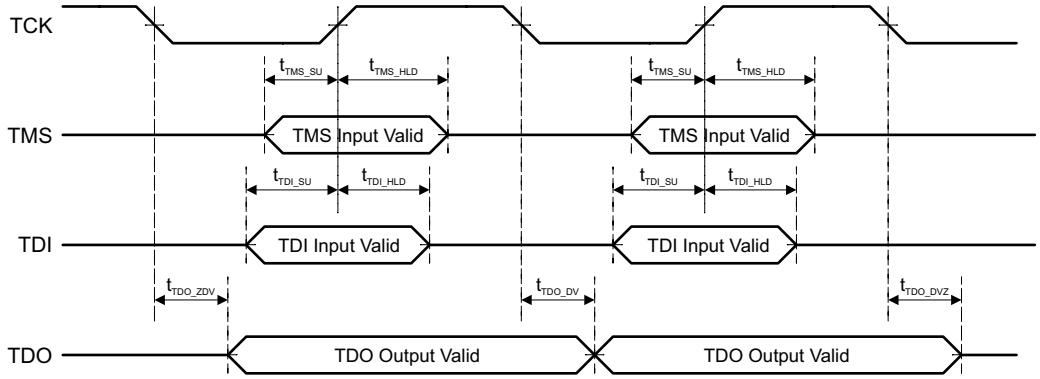


**Figure 5-75. JTAG Test Access Port (TAP) Timing**

# 6 Detailed Description

## 6.1 Overview

The MSP432P401x microcontroller is an ideal combination of the TI MSP430 low-power DNA, advance mixed-signal features, and the processing capabilities of the ARM 32-bit Cortex-M4 RISC engine. The microcontrollers ship with bundled driver libraries and are compatible with standard components of the ARM ecosystem.

## 6.2 Processor and Execution Features

The Cortex-M4 processor provides a high-performance low-cost platform that meets system requirements of minimal memory implementation, reduced pin count, and low power consumption, while delivering outstanding computational performance and exceptional system response to interrupts. The Thumb®-2 mixed 16- and 32-bit instruction set of the processor delivers the high performance that is expected of a 32-bit ARM core in a compact memory size usually associated with 8- and 16-bit devices (typically in the range of a few kilobytes of memory needed for microcontroller-class applications).

In the MSP432P401x MCUs, the Cortex-M4 processor can run up to 48 MHz, delivering high performance for the targeted class of applications, while at the same time maintaining ultra-low active power consumption.

### *6.2.1 Floating-Point Unit*

The Cortex-M4 processor on the MSP432P401x MCUs includes a tightly coupled floating-point unit (FPU). The FPU is an IEEE 754 compliant single precision floating point module supporting add, subtract, multiply, divide, accumulate, and square-root operations. It also provides conversion between fixed-point and floating-point data formats and floating point constant instructions.

### *6.2.2 Memory Protection Unit*

The Cortex-M4 processor on the MSP432P401x MCUs includes a tightly coupled memory protection unit (MPU) that supports up to eight protection regions. Applications can use the MPU to enforce memory privilege rules that isolate processes from each other or enforce memory access rules. These features are typically required for operating system handling purposes.

### *6.2.3 Nested Vectored Interrupt Controller (NVIC)*

The NVIC supports up to 64 interrupts with eight levels of interrupt priority. The Cortex-M4 NVIC architecture allows for low latency, efficient interrupt and event handling, and seamless integration to device-level power-control strategies.

### *6.2.4 SysTick*

The Cortex-M4 includes an integrated system timer, SysTick, which provides a simple, 24-bit, clear-on-write, decrementing, wrap-on-zero counter with a flexible control mechanism. The counter can be used in several different ways, and it is typically deployed either for operating system related purposes or as a general-purpose alarm mechanism.

### *6.2.5 Debug and Trace Features*

The Cortex-M4 processor implements a complete hardware debug solution and provides high system visibility of the processor and memory through either a traditional 4-pin JTAG port or a 2-pin Serial Wire Debug (SWD) port, which is ideal for microcontrollers and other small-package devices. The SWJ-DP interface combines the SWD and JTAG debug ports into one module, which allows a seamless switch between the 2-pin and 4-pin modes of operation, depending on application needs.


Copyright © 2015–2016, Texas Instruments Incorporated

For system trace, the processor integrates an Instrumentation Trace Macrocell (ITM) alongside data watch points and a profiling unit. To enable simple and cost-effective profiling of the system trace events, a Serial Wire Viewer (SWV) can export a stream of software-generated messages, data trace, and profiling information through a single pin.

**NOTE**

For detailed specifications and information on the programmer's model for the Cortex-M4 CPU and the associated peripherals mentioned throughout Section 6.2, see the appropriate reference manual at www.arm.com.

## 6.3 Memory Map

The device supports a 4GB address space that is divided into eight 512MB zones (see Figure 6-1).

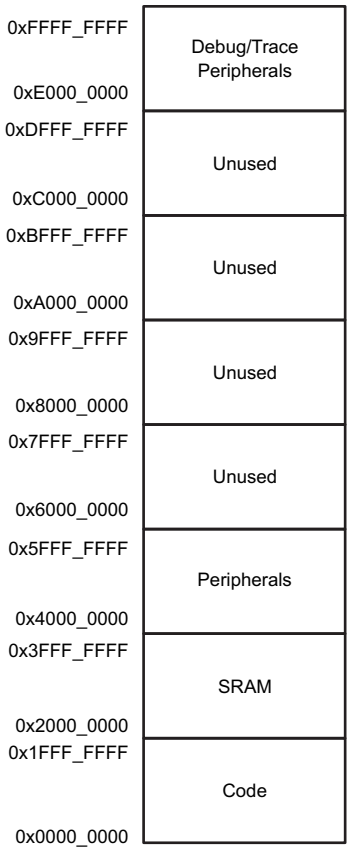


**Figure 6-1. Device Memory Zones**

### *6.3.1 Code Zone Memory Map*

The region from 0x0000_0000 to 0x1FFF_FFFF is defined as the Code zone, and is accessible through the ICODE and DCODE buses of the Cortex-M4 processor and through the system DMA. This region maps the flash, the ROM, and the internal SRAM (permitting optimal single-cycle execution from the SRAM).

Figure 6-2 shows the MSP432P401x-specific memory map of the Code zone, as visible to the user code.

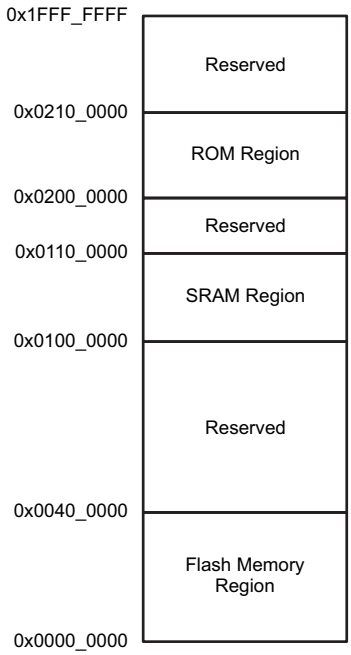


**Figure 6-2. Code Zone Memory Map**

#### 6.3.1.1 Flash Memory Region

The 4MB region from 0x0000_0000 to 0x003F_FFFF is defined as the flash memory region. This region is further divided into different types of flash memory regions, which are explained in Section 6.4.1.

#### 6.3.1.2 SRAM Region

The 1MB region from 0x0100_0000 to 0x010F_FFFF is defined as the SRAM region. This region is also aliased in the SRAM *zone* of the device, thereby allowing efficient access to the SRAM, both for instruction fetches and data reads. Refer to Section 6.4.2 for more details.

#### 6.3.1.3 ROM Region

The 1MB region from 0x0200_0000 to 0x020F_FFFF is defined as the ROM region. Refer to Section 6.4.3 for details about the ROM.

### *6.3.2 SRAM Zone Memory Map*

The SRAM zone of the device lies in the address range of 0x2000_0000 to 0x3FFF_FFFF. Figure 6-3 shows how this zone is divided.


Copyright © 2015–2016, Texas Instruments Incorporated

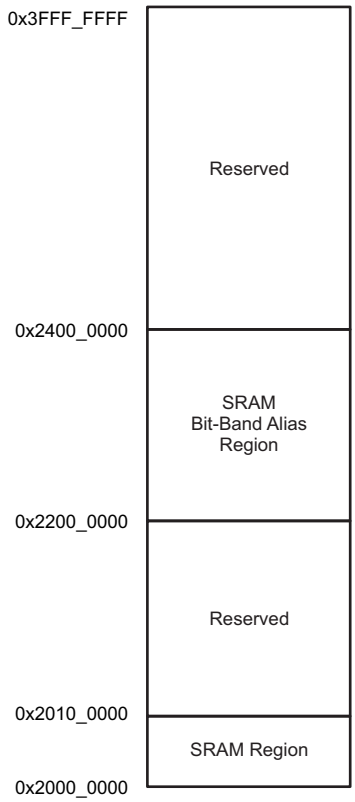


**Figure 6-3. SRAM Zone Memory Map**

#### 6.3.2.1 SRAM Region

The 1MB region from 0x2000_0000 to 0x200F_FFFF is defined as the SRAM region. The SRAM accessible in this region is also aliased in the Code zone of the device, thereby allowing efficient access to the SRAM, both for instruction fetches and data reads. Refer to Section 6.4.2 for details about the SRAM.

#### 6.3.2.2 SRAM Bit-Band Alias Region

The 32MB region from 0x2200_0000 through 0x23FF_FFFF forms the bit-band alias region for the 1-MB SRAM region. Bit-banding is a feature of the Cortex-M4 processor and allows the application to set or clear individual bits throughout the SRAM space without using the pipeline bandwidth of the processor to carry out an exclusive read-modify-write sequence.

### *6.3.3 Peripheral Zone Memory Map*

The Peripheral zone of the device lies in the address range of 0x4000_0000 to 0x5FFF_FFFF. Figure 6-4 shows how this range is further divided.

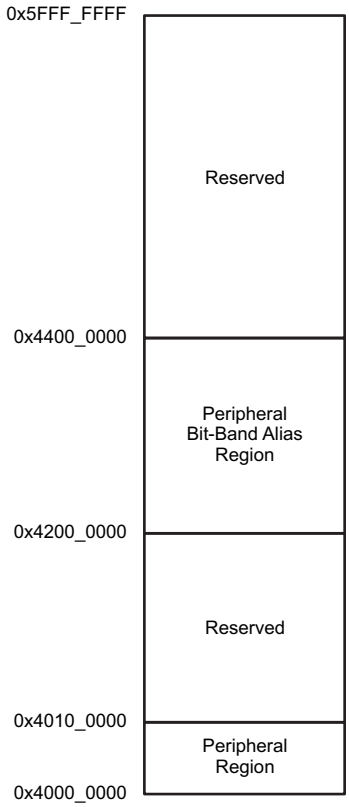


**Figure 6-4. Peripheral Zone Memory Map**

#### 6.3.3.1 Peripheral Region

The 1MB region from 0x4000_0000 to 0x400F_FFFF is dedicated to the system and application control peripherals of the device. On the MSP432P401x MCUs, a total of 128KB of this region is dedicated for peripherals, while the rest is reserved. Table 6-1 lists the peripheral allocation within this 128-KB space. Note that all peripherals may not be available in all devices of the family (details in the REMARKS column). If a peripheral is listed as N/A for a particular device, treat the corresponding address space as reserved.

**NOTE**

Peripherals that are marked as 16-bit should be accessed through byte or half-word size read or write only. Any 32-bit access to these peripherals results in a bus error response.

**Table 6-1. Peripheral Address Offsets**

| ADDRESS RANGE | PERIPHERAL | TABLE | REMARKS |
|---|---|---|---|
| 0x4000_0000–0x4000_03FF | Timer_A0 | Table 6-2 | 16-bit peripheral |
| 0x4000_0400–0x4000_07FF | Timer_A1 | Table 6-3 | 16-bit peripheral |
| 0x4000_0800–0x4000_0BFF | Timer_A2 | Table 6-4 | 16-bit peripheral |
| 0x4000_0C00–0x4000_0FFF | Timer_A3 | Table 6-5 | 16-bit peripheral |
| 0x4000_1000–0x4000_13FF | eUSCI_A0 | Table 6-6 | 16-bit peripheral |
| 0x4000_1400–0x4000_17FF | eUSCI_A1 | Table 6-7 | 16-bit peripheral |
| 0x4000_1800–0x4000_1BFF | eUSCI_A2 | Table 6-8 | 16-bit peripheral |
| 0x4000_1C00–0x4000_1FFF | eUSCI_A3 | Table 6-9 | 16-bit peripheral |
| 0x4000_2000–0x4000_23FF | eUSCI_B0 | Table 6-10 | 16-bit peripheral |
| 0x4000_2400–0x4000_27FF | eUSCI_B1 | Table 6-11 | 16-bit peripheral |


Copyright © 2015–2016, Texas Instruments Incorporated

**Table 6-1. Peripheral Address Offsets (continued)**

| ADDRESS RANGE | PERIPHERAL | TABLE | REMARKS |
|---|---|---|---|
| 0x4000_2800–0x4000_2BFF | eUSCI_B2 | Table 6-12 | 16-bit peripheral |
| 0x4000_2C00–0x4000_2FFF | eUSCI_B3 | Table 6-13 | 16-bit peripheral |
| 0x4000_3000–0x4000_33FF | REF_A | Table 6-14 | 16-bit peripheral |
| 0x4000_3400–0x4000_37FF | COMP_E0 | Table 6-15 | 16-bit peripheral |
| 0x4000_3800–0x4000_3BFF | COMP_E1 | Table 6-16 | 16-bit peripheral |
| 0x4000_3C00–0x4000_3FFF | AES256 | Table 6-17 | 16-bit peripheral |
| 0x4000_4000–0x4000_43FF | CRC32 | Table 6-18 | 16-bit peripheral |
| 0x4000_4400–0x4000_47FF | RTC_C | Table 6-19 | 16-bit peripheral |
| 0x4000_4800–0x4000_4BFF | WDT_A | Table 6-20 | 16-bit peripheral |
| 0x4000_4C00–0x4000_4FFF | Port Module | Table 6-21 | 16-bit peripheral |
| 0x4000_5000–0x4000_53FF | Port Mapping Controller | Table 6-22 | 16-bit peripheral |
| 0x4000_5400–0x4000_57FF | Capacitive Touch I/O 0 | Table 6-23 | 16-bit peripheral |
| 0x4000_5800–0x4000_5BFF | Capacitive Touch I/O 1 | Table 6-24 | 16-bit peripheral |
| 0x4000_5C00–0x4000_8FFF | Reserved | | Read only, always reads 0h |
| 0x4000_9000–0x4000_BFFF | Reserved | | Read only, always reads 0h |
| 0x4000_C000–0x4000_CFFF | Timer32 | Table 6-25 | |
| 0x4000_D000–0x4000_DFFF | Reserved | | Read only, always reads 0h |
| 0x4000_E000–0x4000_FFFF | DMA | Table 6-26 | |
| 0x4001_0000–0x4001_03FF | PCM | Table 6-27 | |
| 0x4001_0400–0x4001_07FF | CS | Table 6-28 | |
| 0x4001_0800–0x4001_0FFF | PSS | Table 6-29 | |
| 0x4001_1000–0x4001_17FF | FLCTL | Table 6-30 | |
| 0x4001_1800–0x4001_1BFF | Reserved | | Read only, always reads 0h |
| 0x4001_1C00–0x4001_1FFF | Reserved | | Read only, always reads 0h |
| 0x4001_2000–0x4001_23FF | ADC14 | Table 6-31 | |
| 0x4001_2400–0x4001_FFFF | Reserved | | Read only, always reads 0h |

**Table 6-2. Timer_A0 Registers (Base Address: 0x4000_0000)**

| REGISTER NAME | ACRONYM | OFFSET |
|---|---|---|
| Timer_A0 Control | TA0CTL | 00h |
| Timer_A0 Capture/Compare Control 0 | TA0CCTL0 | 02h |
| Timer_A0 Capture/Compare Control 1 | TA0CCTL1 | 04h |
| Timer_A0 Capture/Compare Control 2 | TA0CCTL2 | 06h |
| Timer_A0 Capture/Compare Control 3 | TA0CCTL3 | 08h |
| Timer_A0 Capture/Compare Control 4 | TA0CCTL4 | 0Ah |
| Timer_A0 Counter | TA0R | 10h |
| Timer_A0 Capture/Compare 0 | TA0CCR0 | 12h |
| Timer_A0 Capture/Compare 1 | TA0CCR1 | 14h |
| Timer_A0 Capture/Compare 2 | TA0CCR2 | 16h |
| Timer_A0 Capture/Compare 3 | TA0CCR3 | 18h |
| Timer_A0 Capture/Compare 4 | TA0CCR4 | 1Ah |
| Timer_A0 Interrupt Vector | TA0IV | 2Eh |
| Timer_A0 Expansion 0 | TA0EX0 | 20h |

Copyright © 2015–2016, Texas Instruments Incorporated

### Table 6-3. Timer_A1 Registers (Base Address: 0x4000_0400)

| REGISTER NAME | ACRONYM | OFFSET |
|---|---|---|
| Timer_A1 Control | TA1CTL | 00h |
| Timer_A1 Capture/Compare Control 0 | TA1CCTL0 | 02h |
| Timer_A1 Capture/Compare Control 1 | TA1CCTL1 | 04h |
| Timer_A1 Capture/Compare Control 2 | TA1CCTL2 | 06h |
| Timer_A1 Capture/Compare Control 3 | TA1CCTL3 | 08h |
| Timer_A1 Capture/Compare Control 4 | TA1CCTL4 | 0Ah |
| Timer_A1 Counter | TA1R | 10h |
| Timer_A1 Capture/Compare 0 | TA1CCR0 | 12h |
| Timer_A1 Capture/Compare 1 | TA1CCR1 | 14h |
| Timer_A1 Capture/Compare 2 | TA1CCR2 | 16h |
| Timer_A1 Capture/Compare 3 | TA1CCR3 | 18h |
| Timer_A1 Capture/Compare 4 | TA1CCR4 | 1Ah |
| Timer_A1 Interrupt Vector | TA1IV | 2Eh |
| Timer_A1 Expansion 0 | TA1EX0 | 20h |

### Table 6-4. Timer_A2 Registers (Base Address: 0x4000_0800)

| REGISTER NAME | ACRONYM | OFFSET |
|---|---|---|
| Timer_A2 Control | TA2CTL | 00h |
| Timer_A2 Capture/Compare Control 0 | TA2CCTL0 | 02h |
| Timer_A2 Capture/Compare Control 1 | TA2CCTL1 | 04h |
| Timer_A2 Capture/Compare Control 2 | TA2CCTL2 | 06h |
| Timer_A2 Capture/Compare Control 3 | TA2CCTL3 | 08h |
| Timer_A2 Capture/Compare Control 4 | TA2CCTL4 | 0Ah |
| Timer_A2 Counter | TA2R | 10h |
| Timer_A2 Capture/Compare 0 | TA2CCR0 | 12h |
| Timer_A2 Capture/Compare 1 | TA2CCR1 | 14h |
| Timer_A2 Capture/Compare 2 | TA2CCR2 | 16h |
| Timer_A2 Capture/Compare 3 | TA2CCR3 | 18h |
| Timer_A2 Capture/Compare 4 | TA2CCR4 | 1Ah |
| Timer_A2 Interrupt Vector | TA2IV | 2Eh |
| Timer_A2 Expansion 0 | TA2EX0 | 20h |

### Table 6-5. Timer_A3 Registers (Base Address: 0x4000_0C00)

| REGISTER NAME | ACRONYM | OFFSET |
|---|---|---|
| Timer_A3 Control | TA3CTL | 00h |
| Timer_A3 Capture/Compare Control 0 | TA3CCTL0 | 02h |
| Timer_A3 Capture/Compare Control 1 | TA3CCTL1 | 04h |
| Timer_A3 Capture/Compare Control 2 | TA3CCTL2 | 06h |
| Timer_A3 Capture/Compare Control 3 | TA3CCTL3 | 08h |
| Timer_A3 Capture/Compare Control 4 | TA3CCTL4 | 0Ah |
| Timer_A3 Counter | TA3R | 10h |
| Timer_A3 Capture/Compare 0 | TA3CCR0 | 12h |
| Timer_A3 Capture/Compare 1 | TA3CCR1 | 14h |
| Timer_A3 Capture/Compare 2 | TA3CCR2 | 16h |
| Timer_A3 Capture/Compare 3 | TA3CCR3 | 18h |
| Timer_A3 Capture/Compare 4 | TA3CCR4 | 1Ah |
| Timer_A3 Interrupt Vector | TA3IV | 2Eh |


Copyright © 2015–2016, Texas Instruments Incorporated

### Table 6-5. Timer_A3 Registers (Base Address: 0x4000_0C00) (continued)

| REGISTER NAME | ACRONYM | OFFSET |
|---|---|---|
| Timer_A3 Expansion 0 | TA3EX0 | 20h |

### Table 6-6. eUSCI_A0 Registers (Base Address: 0x4000_1000)

| REGISTER NAME | ACRONYM | OFFSET |
|---|---|---|
| eUSCI_A0 Control Word 0 | UCA0CTLW0 | 00h |
| eUSCI_A0 Control Word 1 | UCA0CTLW1 | 02h |
| eUSCI_A0 Baud Rate Control | UCA0BRW | 06h |
| eUSCI_A0 Modulation Control | UCA0MCTLW | 08h |
| eUSCI_A0 Status | UCA0STATW | 0Ah |
| eUSCI_A0 Receive Buffer | UCA0RXBUF | 0Ch |
| eUSCI_A0 Transmit Buffer | UCA0TXBUF | 0Eh |
| eUSCI_A0 Auto Baud Rate Control | UCA0ABCTL | 10h |
| eUSCI_A0 IrDA Control | UCA0IRCTL | 12h |
| eUSCI_A0 Interrupt Enable | UCA0IE | 1Ah |
| eUSCI_A0 Interrupt Flag | UCA0IFG | 1Ch |
| eUSCI_A0 Interrupt Vector | UCA0IV | 1Eh |

### Table 6-7. eUSCI_A1 Registers (Base Address: 0x4000_1400)

| REGISTER NAME | ACRONYM | OFFSET |
|---|---|---|
| eUSCI_A1 Control Word 0 | UCA1CTLW0 | 00h |
| eUSCI_A1 Control Word 1 | UCA1CTLW1 | 02h |
| eUSCI_A1 Baud Rate Control | UCA1BRW | 06h |
| eUSCI_A1 Modulation Control | UCA1MCTLW | 08h |
| eUSCI_A1 Status | UCA1STATW | 0Ah |
| eUSCI_A1 Receive Buffer | UCA1RXBUF | 0Ch |
| eUSCI_A1 Transmit Buffer | UCA1TXBUF | 0Eh |
| eUSCI_A1 Auto Baud Rate Control | UCA1ABCTL | 10h |
| eUSCI_A1 IrDA Control | UCA1IRCTL | 12h |
| eUSCI_A1 Interrupt Enable | UCA1IE | 1Ah |
| eUSCI_A1 Interrupt Flag | UCA1IFG | 1Ch |
| eUSCI_A1 Interrupt Vector | UCA1IV | 1Eh |

### Table 6-8. eUSCI_A2 Registers (Base Address: 0x4000_1800)

| REGISTER NAME | ACRONYM | OFFSET |
|---|---|---|
| eUSCI_A2 Control Word 0 | UCA2CTLW0 | 00h |
| eUSCI_A2 Control Word 1 | UCA2CTLW1 | 02h |
| eUSCI_A2 Baud Rate Control | UCA2BRW | 06h |
| eUSCI_A2 Modulation Control | UCA2MCTLW | 08h |
| eUSCI_A2 Status | UCA2STATW | 0Ah |
| eUSCI_A2 Receive Buffer | UCA2RXBUF | 0Ch |
| eUSCI_A2 Transmit Buffer | UCA2TXBUF | 0Eh |
| eUSCI_A2 Auto Baud Rate Control | UCA2ABCTL | 10h |
| eUSCI_A2 IrDA Control | UCA2IRCTL | 12h |
| eUSCI_A2 Interrupt Enable | UCA2IE | 1Ah |
| eUSCI_A2 Interrupt Flag | UCA2IFG | 1Ch |
| eUSCI_A2 Interrupt Vector | UCA2IV | 1Eh |

Copyright © 2015–2016, Texas Instruments Incorporated

### Table 6-9. eUSCI_A3 Registers (Base Address: 0x4000_1C00)

| REGISTER NAME | ACRONYM | OFFSET |
|---|---|---|
| eUSCI_A3 Control Word 0 | UCA3CTLW0 | 00h |
| eUSCI_A3 Control Word 1 | UCA3CTLW1 | 02h |
| eUSCI_A3 Baud Rate Control | UCA3BRW | 06h |
| eUSCI_A3 Modulation Control | UCA3MCTLW | 08h |
| eUSCI_A3 Status | UCA3STATW | 0Ah |
| eUSCI_A3 Receive Buffer | UCA3RXBUF | 0Ch |
| eUSCI_A3 Transmit Buffer | UCA3TXBUF | 0Eh |
| eUSCI_A3 Auto Baud Rate Control | UCA3ABCTL | 10h |
| eUSCI_A3 IrDA Control | UCA3IRCTL | 12h |
| eUSCI_A3 Interrupt Enable | UCA3IE | 1Ah |
| eUSCI_A3 Interrupt Flag | UCA3IFG | 1Ch |
| eUSCI_A3 Interrupt Vector | UCA3IV | 1Eh |

### Table 6-10. eUSCI_B0 Registers (Base Address: 0x4000_2000)

| REGISTER NAME | ACRONYM | OFFSET |
|---|---|---|
| eUSCI_B0 Control Word 0 | UCB0CTLW0 | 00h |
| eUSCI_B0 Control Word 1 | UCB0CTLW1 | 02h |
| eUSCI_B0 Bit Rate Control Word | UCB0BRW | 06h |
| eUSCI_B0 Status Word | UCB0STATW | 08h |
| eUSCI_B0 Byte Counter Threshold | UCB0TBCNT | 0Ah |
| eUSCI_B0 Receive Buffer | UCB0RXBUF | 0Ch |
| eUSCI_B0 Transmit Buffer | UCB0TXBUF | 0Eh |
| eUSCI_B0 I2C Own Address 0 | UCB0I2COA0 | 14h |
| eUSCI_B0 I2C Own Address 1 | UCB0I2COA1 | 16h |
| eUSCI_B0 I2C Own Address 2 | UCB0I2COA2 | 18h |
| eUSCI_B0 I2C Own Address 3 | UCB0I2COA3 | 1Ah |
| eUSCI_B0 Received Address | UCB0ADDRX | 1Ch |
| eUSCI_B0 Address Mask | UCB0ADDMASK | 1Eh |
| eUSCI_B0 I2C Slave Address | UCB0I2CSA | 20h |
| eUSCI_B0 Interrupt Enable | UCB0IE | 2Ah |
| eUSCI_B0 Interrupt Flag | UCB0IFG | 2Ch |
| eUSCI_B0 Interrupt Vector | UCB0IV | 2Eh |

### Table 6-11. eUSCI_B1 Registers (Base Address: 0x4000_2400)

| REGISTER NAME | ACRONYM | OFFSET |
|---|---|---|
| eUSCI_B1 Control Word 0 | UCB1CTLW0 | 00h |
| eUSCI_B1 Control Word 1 | UCB1CTLW1 | 02h |
| eUSCI_B1 Bit Rate Control Word | UCB1BRW | 06h |
| eUSCI_B1 Status Word | UCB1STATW | 08h |
| eUSCI_B1 Byte Counter Threshold | UCB1TBCNT | 0Ah |
| eUSCI_B1 Receive Buffer | UCB1RXBUF | 0Ch |
| eUSCI_B1 Transmit Buffer | UCB1TXBUF | 0Eh |
| eUSCI_B1 I2C Own Address 0 | UCB1I2COA0 | 14h |
| eUSCI_B1 I2C Own Address 1 | UCB1I2COA1 | 16h |
| eUSCI_B1 I2C Own Address 2 | UCB1I2COA2 | 18h |
| eUSCI_B1 I2C Own Address 3 | UCB1I2COA3 | 1Ah |
| eUSCI_B1 Received Address | UCB1ADDRX | 1Ch |


Copyright © 2015–2016, Texas Instruments Incorporated

### Table 6-11. eUSCI_B1 Registers (Base Address: 0x4000_2400) (continued)

| REGISTER NAME | ACRONYM | OFFSET |
|---|---|---|
| eUSCI_B1 Address Mask | UCB1ADDMASK | 1Eh |
| eUSCI_B1 I2C Slave Address | UCB1I2CSA | 20h |
| eUSCI_B1 Interrupt Enable | UCB1IE | 2Ah |
| eUSCI_B1 Interrupt Flag | UCB1IFG | 2Ch |
| eUSCI_B1 Interrupt Vector | UCB1IV | 2Eh |

### Table 6-12. eUSCI_B2 Registers (Base Address: 0x4000_2800)

| REGISTER NAME | ACRONYM | OFFSET |
|---|---|---|
| eUSCI_B2 Control Word 0 | UCB2CTLW0 | 00h |
| eUSCI_B2 Control Word 1 | UCB2CTLW1 | 02h |
| eUSCI_B2 Bit Rate Control Word | UCB2BRW | 06h |
| eUSCI_B2 Status Word | UCB2STATW | 08h |
| eUSCI_B2 Byte Counter Threshold | UCB2TBCNT | 0Ah |
| eUSCI_B2 Receive Buffer | UCB2RXBUF | 0Ch |
| eUSCI_B2 Transmit Buffer | UCB2TXBUF | 0Eh |
| eUSCI_B2 I2C Own Address 0 | UCB2I2COA0 | 14h |
| eUSCI_B2 I2C Own Address 1 | UCB2I2COA1 | 16h |
| eUSCI_B2 I2C Own Address 2 | UCB2I2COA2 | 18h |
| eUSCI_B2 I2C Own Address 3 | UCB2I2COA3 | 1Ah |
| eUSCI_B2 Received Address | UCB2ADDRX | 1Ch |
| eUSCI_B2 Address Mask | UCB2ADDMASK | 1Eh |
| eUSCI_B2 I2C Slave Address | UCB2I2CSA | 20h |
| eUSCI_B2 Interrupt Enable | UCB2IE | 2Ah |
| eUSCI_B2 Interrupt Flag | UCB2IFG | 2Ch |
| eUSCI_B2 Interrupt Vector | UCB2IV | 2Eh |

### Table 6-13. eUSCI_B3 Registers (Base Address: 0x4000_2C00)

| REGISTER NAME | ACRONYM | OFFSET |
|---|---|---|
| eUSCI_B3 Control Word 0 | UCB3CTLW0 | 00h |
| eUSCI_B3 Control Word 1 | UCB3CTLW1 | 02h |
| eUSCI_B3 Bit Rate Control Word | UCB3BRW | 06h |
| eUSCI_B3 Status Word | UCB3STATW | 08h |
| eUSCI_B3 Byte Counter Threshold | UCB3TBCNT | 0Ah |
| eUSCI_B3 Receive Buffer | UCB3RXBUF | 0Ch |
| eUSCI_B3 Transmit Buffer | UCB3TXBUF | 0Eh |
| eUSCI_B3 I2C Own Address 0 | UCB3I2COA0 | 14h |
| eUSCI_B3 I2C Own Address 1 | UCB3I2COA1 | 16h |
| eUSCI_B3 I2C Own Address 2 | UCB3I2COA2 | 18h |
| eUSCI_B3 I2C Own Address 3 | UCB3I2COA3 | 1Ah |
| eUSCI_B3 Received Address | UCB3ADDRX | 1Ch |
| eUSCI_B3 Address Mask | UCB3ADDMASK | 1Eh |
| eUSCI_B3 I2C Slave Address | UCB3I2CSA | 20h |
| eUSCI_B3 Interrupt Enable | UCB3IE | 2Ah |
| eUSCI_B3 Interrupt Flag | UCB3IFG | 2Ch |
| eUSCI_B3 Interrupt Vector | UCB3IV | 2Eh |

Copyright © 2015–2016, Texas Instruments Incorporated

### Table 6-14. REF_A Registers (Base Address: 0x4000_3000)

| REGISTER NAME | ACRONYM | OFFSET |
|---|---|---|
| REF_A Control 0 | REFCTL0 | 00h |

### Table 6-15. COMP_E0 Registers (Base Address: 0x4000_3400)

| REGISTER NAME | ACRONYM | OFFSET |
|---|---|---|
| Comparator_E0 Control 0 | CE0CTL0 | 00h |
| Comparator_E0 Control 1 | CE0CTL1 | 02h |
| Comparator_E0 Control 2 | CE0CTL2 | 04h |
| Comparator_E0 Control 3 | CE0CTL3 | 06h |
| Comparator_E0 Interrupt | CE0INT | 0Ch |
| Comparator_E0 Interrupt Vector Word | CE0IV | 0Eh |

### Table 6-16. COMP_E1 Registers (Base Address: 0x4000_3800)

| REGISTER NAME | ACRONYM | OFFSET |
|---|---|---|
| Comparator_E1 Control 0 | CE1CTL0 | 00h |
| Comparator_E1 Control 1 | CE1CTL1 | 02h |
| Comparator_E1 Control 2 | CE1CTL2 | 04h |
| Comparator_E1 Control 3 | CE1CTL3 | 06h |
| Comparator_E1 Interrupt | CE1INT | 0Ch |
| Comparator_E1 Interrupt Vector Word | CE1IV | 0Eh |

### Table 6-17. AES256 Registers (Base Address: 0x4000_3C00)

| REGISTER NAME | ACRONYM | OFFSET |
|---|---|---|
| AES Accelerator Control 0 | AESACTL0 | 00h |
| AES Accelerator Control 1 | AESACTL1 | 02h |
| AES Accelerator Status | AESASTAT | 04h |
| AES Accelerator Key | AESAKEY | 06h |
| AES Accelerator Data In | AESADIN | 08h |
| AES Accelerator Data Out | AESADOUT | 0Ah |
| AES Accelerator XORed Data In | AESAXDIN | 0Ch |
| AES Accelerator XORed Data In (no trigger) | AESAXIN | 0Eh |

### Table 6-18. CRC32 Registers (Base Address: 0x4000_4000)

| REGISTER NAME | ACRONYM | OFFSET |
|---|---|---|
| CRC32 Data Input Low | CRC32DI | 000h |
| CRC32 Data In Reverse Low | CRC32DIRB | 004h |
| CRC32 Initialization and Result Low | CRC32INIRES_LO | 008h |
| CRC32 Initialization and Result High | CRC32INIRES_HI | 00Ah |
| CRC32 Result Reverse Low | CRC32RESR_LO | 00Ch |
| CRC32 Result Reverse High | CRC32RESR_HI | 00Eh |
| CRC16 Data Input Low | CRC16DI | 010h |
| CRC16 Data In Reverse Low | CRC16DIRB | 014h |
| CRC16 Initialization and Result | CRC16INIRES | 018h |
| CRC16 Result Reverse | CRC16RESR | 01Eh |


Copyright © 2015–2016, Texas Instruments Incorporated

### Table 6-19. RTC_C Registers (Base Address: 0x4000_4400)

| REGISTER NAME | ACRONYM | OFFSET |
|---|---|---|
| Real-Time Clock Control 0 | RTCCTL0 | 00h |
| Real-Time Clock Control 1, 3 | RTCCTL13 | 02h |
| Real-Time Clock Offset Calibration | RTCOCAL | 04h |
| Real-Time Clock Temperature Compensation | RTCTCMP | 06h |
| Real-Time Prescale Timer 0 Control | RTCPS0CTL | 08h |
| Real-Time Prescale Timer 1 Control | RTCPS1CTL | 0Ah |
| Real-Time Prescale Timer 0, 1 Counter | RTCPS | 0Ch |
| Real Time Clock Interrupt Vector | RTCIV | 0Eh |
| Real-Time Clock Seconds, Minutes | RTCTIM0 | 10h |
| Real-Time Clock Hour, Day of Week | RTCTIM1 | 12h |
| Real-Time Clock Date | RTCDATE | 14h |
| Real-Time Clock Year | RTCYEAR | 16h |
| Real-Time Clock Minutes, Hour Alarm | RTCAMINHR | 18h |
| Real-Time Clock Day of Week, Day of Month Alarm | RTCADOWDAY | 1Ah |
| Binary-to-BCD Conversion | RTCBIN2BCD | 1Ch |
| BCD-to-Binary Conversion | RTCBCD2BIN | 1Eh |

### Table 6-20. WDT_A Registers (Base Address: 0x4000_4800)

| REGISTER NAME | ACRONYM | OFFSET |
|---|---|---|
| Watchdog Timer Control | WDTCTL | 0Ch |

### Table 6-21. Port Registers (Base Address: 0x4000_4C00)

| REGISTER NAME | ACRONYM | OFFSET |
|---|---|---|
| Port 1 Input | P1IN | 000h |
| Port 2 Input | P2IN | 001h |
| Port 1 Output | P1OUT | 002h |
| Port 2 Output | P2OUT | 003h |
| Port 1 Direction | P1DIR | 004h |
| Port 2 Direction | P2DIR | 005h |
| Port 1 Resistor Enable | P1REN | 006h |
| Port 2 Resistor Enable | P2REN | 007h |
| Port 2 Drive Strength | P2DS | 009h |
| Port 1 Select 0 | P1SEL0 | 00Ah |
| Port 2 Select 0 | P2SEL0 | 00Bh |
| Port 1 Select 1 | P1SEL1 | 00Ch |
| Port 2 Select 1 | P2SEL1 | 00Dh |
| Port 1 Interrupt Vector | P1IV | 00Eh |
| Port 1 Complement Selection | P1SELC | 016h |
| Port 2 Complement Selection | P2SELC | 017h |
| Port 1 Interrupt Edge Select | P1IES | 018h |
| Port 2 Interrupt Edge Select | P2IES | 019h |
| Port 1 Interrupt Enable | P1IE | 01Ah |
| Port 2 Interrupt Enable | P2IE | 01Bh |
| Port 1 Interrupt Flag | P1IFG | 01Ch |
| Port 2 Interrupt Flag | P2IFG | 01Dh |
| Port 2 Interrupt Vector | P2IV | 01Eh |
| Port 3 Input | P3IN | 020h |

Copyright © 2015–2016, Texas Instruments Incorporated

**Table 6-21. Port Registers (Base Address: 0x4000_4C00) (continued)**

| REGISTER NAME | ACRONYM | OFFSET |
|---|---|---|
| Port 4 Input | P4IN | 021h |
| Port 3 Output | P3OUT | 022h |
| Port 4 Output | P4OUT | 023h |
| Port 3 Direction | P3DIR | 024h |
| Port 4 Direction | P4DIR | 025h |
| Port 3 Resistor Enable | P3REN | 026h |
| Port 4 Resistor Enable | P4REN | 027h |
| Port 3 Select 0 | P3SEL0 | 02Ah |
| Port 4 Select 0 | P4SEL0 | 02Bh |
| Port 3 Select 1 | P3SEL1 | 02Ch |
| Port 4 Select 1 | P4SEL1 | 02Dh |
| Port 3 Interrupt Vector | P3IV | 02Eh |
| Port 3 Complement Selection | P3SELC | 036h |
| Port 4 Complement Selection | P4SELC | 037h |
| Port 3 Interrupt Edge Select | P3IES | 038h |
| Port 4 Interrupt Edge Select | P4IES | 039h |
| Port 3 Interrupt Enable | P3IE | 03Ah |
| Port 4 Interrupt Enable | P4IE | 03Bh |
| Port 3 Interrupt Flag | P3IFG | 03Ch |
| Port 4 Interrupt Flag | P4IFG | 03Dh |
| Port 4 Interrupt Vector | P4IV | 03Eh |
| Port 5 Input | P5IN | 040h |
| Port 6 Input | P6IN | 041h |
| Port 5 Output | P5OUT | 042h |
| Port 6 Output | P6OUT | 043h |
| Port 5 Direction | P5DIR | 044h |
| Port 6 Direction | P6DIR | 045h |
| Port 5 Resistor Enable | P5REN | 046h |
| Port 6 Resistor Enable | P6REN | 047h |
| Port 5 Select 0 | P5SEL0 | 04Ah |
| Port 6 Select 0 | P6SEL0 | 04Bh |
| Port 5 Select 1 | P5SEL1 | 04Ch |
| Port 6 Select 1 | P6SEL1 | 04Dh |
| Port 5 Interrupt Vector | P5IV | 04Eh |
| Port 5 Complement Selection | P5SELC | 056h |
| Port 6 Complement Selection | P6SELC | 057h |
| Port 5 Interrupt Edge Select | P5IES | 058h |
| Port 6 Interrupt Edge Select | P6IES | 059h |
| Port 5 Interrupt Enable | P5IE | 05Ah |
| Port 6 Interrupt Enable | P6IE | 05Bh |
| Port 5 Interrupt Flag | P5IFG | 05Ch |
| Port 6 Interrupt Flag | P6IFG | 05Dh |
| Port 6 Interrupt Vector | P6IV | 05Eh |
| Port 7 Input | P7IN | 060h |
| Port 8 Input | P8IN | 061h |
| Port 7 Output | P7OUT | 062h |
| Port 8 Output | P8OUT | 063h |


Copyright © 2015–2016, Texas Instruments Incorporated

**Table 6-21. Port Registers (Base Address: 0x4000_4C00) (continued)**

| REGISTER NAME | ACRONYM | OFFSET |
|---|---|---|
| Port 7 Direction | P7DIR | 064h |
| Port 8 Direction | P8DIR | 065h |
| Port 7 Resistor Enable | P7REN | 066h |
| Port 8 Resistor Enable | P8REN | 067h |
| Port 7 Select 0 | P7SEL0 | 06Ah |
| Port 8 Select 0 | P8SEL0 | 06Bh |
| Port 7 Select 1 | P7SEL1 | 06Ch |
| Port 8 Select 1 | P8SEL1 | 06Dh |
| Port 7 Interrupt Vector | P7IV | 06Eh |
| Port 7 Complement Selection | P7SELC | 076h |
| Port 8 Complement Selection | P8SELC | 077h |
| Port 7 Interrupt Edge Select | P7IES | 078h |
| Port 8 Interrupt Edge Select | P8IES | 079h |
| Port 7 Interrupt Enable | P7IE | 07Ah |
| Port 8 Interrupt Enable | P8IE | 07Bh |
| Port 7 Interrupt Flag | P7IFG | 07Ch |
| Port 8 Interrupt Flag | P8IFG | 07Dh |
| Port 8 Interrupt Vector | P8IV | 07Eh |
| Port 9 Input | P9IN | 080h |
| Port 10 Input | P10IN | 081h |
| Port 9 Output | P9OUT | 082h |
| Port 10 Output | P10OUT | 083h |
| Port 9 Direction | P9DIR | 084h |
| Port 10 Direction | P10DIR | 085h |
| Port 9 Resistor Enable | P9REN | 086h |
| Port 10 Resistor Enable | P10REN | 087h |
| Port 9 Select 0 | P9SEL0 | 08Ah |
| Port 10 Select 0 | P10SEL0 | 08Bh |
| Port 9 Select 1 | P9SEL1 | 08Ch |
| Port 10 Select 1 | P10SEL1 | 08Dh |
| Port 9 Interrupt Vector | P9IV | 08Eh |
| Port 9 Complement Selection | P9SELC | 096h |
| Port 10 Complement Selection | P10SELC | 097h |
| Port 9 Interrupt Edge Select | P9IES | 098h |
| Port 10 Interrupt Edge Select | P10IES | 099h |
| Port 9 Interrupt Enable | P9IE | 09Ah |
| Port 10 Interrupt Enable | P10IE | 09Bh |
| Port 9 Interrupt Flag | P9IFG | 09Ch |
| Port 10 Interrupt Flag | P10IFG | 09Dh |
| Port 10 Interrupt Vector | P10IV | 09Eh |
| Port J Input | PJIN | 120h |
| Port J Output | PJOUT | 122h |
| Port J Direction | PJDIR | 124h |
| Port J Resistor Enable | PJREN | 126h |
| Port J Select 0 | PJSEL0 | 12Ah |
| Port J Select 1 | PJSEL1 | 12Ch |
| Port J Complement Select | PJSELC | 136h |

Copyright © 2015–2016, Texas Instruments Incorporated

### Table 6-22. PMAP Registers (Base Address: 0x4000_5000)

| REGISTER NAME | ACRONYM | OFFSET |
|---|---|---|
| Port Mapping Key | PMAPKEYID | 00h |
| Port Mapping Control | PMAPCTL | 02h |
| Port Mapping P2.0 | P2MAP0 | 10h |
| Port Mapping P2.1 | P2MAP1 | 11h |
| Port Mapping P2.2 | P2MAP2 | 12h |
| Port Mapping P2.3 | P2MAP3 | 13h |
| Port Mapping P2.4 | P2MAP4 | 14h |
| Port Mapping P2.5 | P2MAP5 | 15h |
| Port Mapping P2.6 | P2MAP6 | 16h |
| Port Mapping P2.7 | P2MAP7 | 17h |
| Port Mapping P3.0 | P3MAP0 | 18h |
| Port Mapping P3.1 | P3MAP1 | 19h |
| Port Mapping P3.2 | P3MAP2 | 1Ah |
| Port Mapping P3.3 | P3MAP3 | 1Bh |
| Port Mapping P3.4 | P3MAP4 | 1Ch |
| Port Mapping P3.5 | P3MAP5 | 1Dh |
| Port Mapping P3.6 | P3MAP6 | 1Eh |
| Port Mapping P3.7 | P3MAP7 | 1Fh |
| Port Mapping P7.0 | P7MAP0 | 38h |
| Port Mapping P7.1 | P7MAP1 | 39h |
| Port Mapping P7.2 | P7MAP2 | 3Ah |
| Port Mapping P7.3 | P7MAP3 | 3Bh |
| Port Mapping P7.4 | P7MAP4 | 3Ch |
| Port Mapping P7.5 | P7MAP5 | 3Dh |
| Port Mapping P7.6 | P7MAP6 | 3Eh |
| Port Mapping P7.7 | P7MAP7 | 3Fh |

### Table 6-23. Capacitive Touch I/O 0 Registers (Base Address: 0x4000_5400)

| REGISTER NAME | ACRONYM | OFFSET |
|---|---|---|
| Capacitive Touch I/O 0 Control | CAPTIO0CTL | 0Eh |

### Table 6-24. Capacitive Touch I/O 1 Registers (Base Address: 0x4000_5800)

| REGISTER NAME | ACRONYM | OFFSET |
|---|---|---|
| Capacitive Touch I/O 1 Control | CAPTIO1CTL | 0Eh |

### Table 6-25. Timer32 Registers (Base Address: 0x4000_C000)

| REGISTER NAME | ACRONYM | OFFSET |
|---|---|---|
| Timer 1 Load | T32LOAD1 | 00h |
| Timer 1 Current Value | T32VALUE1 | 04h |
| Timer 1 Timer Control | T32CONTROL1 | 08h |
| Timer 1 Interrupt Clear | T32INTCLR1 | 0Ch |
| Timer 1 Raw Interrupt Status | T32RIS1 | 10h |
| Timer 1 Interrupt Status | T32MIS1 | 14h |
| Timer 1 Background Load | T32BGLOAD1 | 18h |
| Timer 2 Load | T32LOAD2 | 20h |
| Timer 2 Current Value | T32VALUE2 | 24h |


Copyright © 2015–2016, Texas Instruments Incorporated

### Table 6-25. Timer32 Registers (Base Address: 0x4000_C000) (continued)

| REGISTER NAME | ACRONYM | OFFSET |
|---|---|---|
| Timer 2 Timer Control | T32CONTROL2 | 28h |
| Timer 2 Interrupt Clear | T32INTCLR2 | 2Ch |
| Timer 2 Raw Interrupt Status | T32RIS2 | 30h |
| Timer 2 Interrupt Status | T32MIS2 | 34h |
| Timer 2 Background Load | T32BGLOAD2 | 38h |

### Table 6-26. DMA Registers (Base Address: 0x4000_E000)

| REGISTER NAME | ACRONYM | OFFSET |
|---|---|---|
| Device Configuration Status | DMA_DEVICE_CFG | 000h |
| Software Channel Trigger | DMA_SW_CHTRIG | 004h |
| Channel 0 Source Configuration | DMA_CH0_SRCCFG | 010h |
| Channel 1 Source Configuration | DMA_CH1_SRCCFG | 014h |
| Channel 2 Source Configuration | DMA_CH2_SRCCFG | 018h |
| Channel 3 Source Configuration | DMA_CH3_SRCCFG | 01Ch |
| Channel 4 Source Configuration | DMA_CH4_SRCCFG | 020h |
| Channel 5 Source Configuration | DMA_CH5_SRCCFG | 024h |
| Channel 6 Source Configuration | DMA_CH6_SRCCFG | 028h |
| Channel 7 Source Configuration | DMA_CH7_SRCCFG | 02Ch |
| Interrupt 1 Source Channel Configuration | DMA_INT1_SRCCFG | 100h |
| Interrupt 2 Source Channel Configuration | DMA_INT2_SRCCFG | 104h |
| Interrupt 3 Source Channel Configuration | DMA_INT3_SRCCFG | 108h |
| Interrupt 0 Source Channel Flag | DMA_INT0_SRCFLG | 110h |
| Interrupt 0 Source Channel Clear Flag | DMA_INT0_CLRFLG | 114h |
| Status | DMA_STAT | 1000h |
| Configuration | DMA_CFG | 1004h |
| Channel Control Data Base Pointer | DMA_CTLBASE | 1008h |
| Channel Alternate Control Data Base Pointer | DMA_ALTBASE | 100Ch |
| Channel Wait on Request Status | DMA_WAITSTAT | 1010h |
| Channel Software Request | DMA_SWREQ | 1014h |
| Channel Useburst Set | DMA_USEBURSTSET | 1018h |
| Channel Useburst Clear | DMA_USEBURSTCLR | 101Ch |
| Channel Request Mask Set | DMA_REQMASKSET | 1020h |
| Channel Request Mask Clear | DMA_REQMASKCLR | 1024h |
| Channel Enable Set | DMA_ENASET | 1028h |
| Channel Enable Clear | DMA_ENACLR | 102Ch |
| Channel Primary-Alternate Set | DMA_ALTSET | 1030h |
| Channel Primary-Alternate Clear | DMA_ALTCLR | 1034h |
| Channel Priority Set | DMA_PRIOSET | 1038h |
| Channel Priority Clear | DMA_PRIOCLR | 103Ch |
| Bus Error Clear | DMA_ERRCLR | 104Ch |

### Table 6-27. PCM Registers (Base Address: 0x4001_0000)

| REGISTER NAME | ACRONYM | OFFSET |
|---|---|---|
| Control 0 | PCMCTL0 | 00h |
| Control 1 | PCMCTL1 | 04h |
| Interrupt Enable | PCMIE | 08h |
| Interrupt Flag | PCMIFG | 0Ch |

Copyright © 2015–2016, Texas Instruments Incorporated

### Table 6-27. PCM Registers (Base Address: 0x4001_0000) (continued)

| REGISTER NAME | ACRONYM | OFFSET |
|---|---|---|
| Clear Interrupt Flag | PCMCLRIFG | 10h |

### Table 6-28. CS Registers (Base Address: 0x4001_0400)

| REGISTER NAME | ACRONYM | OFFSET |
|---|---|---|
| Key | CSKEY | 00h |
| Control 0 | CSCTL0 | 04h |
| Control 1 | CSCTL1 | 08h |
| Control 2 | CSCTL2 | 0Ch |
| Control 3 | CSCTL3 | 10h |
| Clock Enable | CSCLKEN | 30h |
| Status | CSSTAT | 34h |
| Interrupt Enable | CSIE | 40h |
| Interrupt Flag | CSIFG | 48h |
| Clear Interrupt Flag | CSCLRIFG | 50h |
| Set Interrupt Flag | CSSETIFG | 58h |
| DCO External Resistor Calibration 0 | CSDCOERCAL0 | 60h |
| DCO External Resistor Calibration 1 | CSDCOERCAL1 | 64h |

### Table 6-29. PSS Registers (Base Address: 0x4001_0800)

| REGISTER NAME | ACRONYM | OFFSET |
|---|---|---|
| Key | PSSKEY | 00h |
| Control 0 | PSSCTL0 | 04h |
| Interrupt Enable | PSSIE | 34h |
| Interrupt Flag | PSSIFG | 38h |
| Clear Interrupt Flag | PSSCLRIFG | 3Ch |

### Table 6-30. FLCTL Registers (Base Address: 0x4001_1000)

| REGISTER NAME | ACRONYM | OFFSET |
|---|---|---|
| Power Status | FLCTL_POWER_STAT | 000h |
| Bank 0 Read Control | FLCTL_BANK0_RDCTL | 010h |
| Bank 1 Read Control | FLCTL_BANK1_RDCTL | 014h |
| Read Burst/Compare Control and Status | FLCTL_RDBRST_CTLSTAT | 020h |
| Read Burst/Compare Start Address | FLCTL_RDBRST_STARTADDR | 024h |
| Read Burst/Compare Length | FLCTL_RDBRST_LEN | 028h |
| Read Burst/Compare Fail Address | FLCTL_RDBRST_FAILADDR | 03Ch |
| Read Burst/Compare Fail Count | FLCTL_RDBRST_FAILCNT | 040h |
| Program Control and Status | FLCTL_PRG_CTLSTAT | 050h |
| Program Burst Control and Status | FLCTL_PRGBRST_CTLSTAT | 054h |
| Program Burst Start Address | FLCTL_PRGBRST_STARTADDR | 058h |
| Program Burst Data0 0 | FLCTL_PRGBRST_DATA0_0 | 060h |
| Program Burst Data0 1 | FLCTL_PRGBRST_DATA0_1 | 064h |
| Program Burst Data0 2 | FLCTL_PRGBRST_DATA0_2 | 068h |
| Program Burst Data0 3 | FLCTL_PRGBRST_DATA0_3 | 06Ch |
| Program Burst Data1 0 | FLCTL_PRGBRST_DATA1_0 | 070h |
| Program Burst Data1 1 | FLCTL_PRGBRST_DATA1_1 | 074h |
| Program Burst Data1 2 | FLCTL_PRGBRST_DATA1_2 | 078h |


Copyright © 2015–2016, Texas Instruments Incorporated

**Table 6-30. FLCTL Registers (Base Address: 0x4001_1000) (continued)**

| REGISTER NAME | ACRONYM | OFFSET |
|---|---|---|
| Program Burst Data1 3 | FLCTL_PRGBRST_DATA1_3 | 07Ch |
| Program Burst Data2 0 | FLCTL_PRGBRST_DATA2_0 | 080h |
| Program Burst Data2 1 | FLCTL_PRGBRST_DATA2_1 | 084h |
| Program Burst Data2 2 | FLCTL_PRGBRST_DATA2_2 | 088h |
| Program Burst Data2 3 | FLCTL_PRGBRST_DATA2_3 | 08Ch |
| Program Burst Data3 0 | FLCTL_PRGBRST_DATA3_0 | 090h |
| Program Burst Data3 1 | FLCTL_PRGBRST_DATA3_1 | 094h |
| Program Burst Data3 2 | FLCTL_PRGBRST_DATA3_2 | 098h |
| Program Burst Data3 3 | FLCTL_PRGBRST_DATA3_3 | 09Ch |
| Erase Control and Status | FLCTL_ERASE_CTLSTAT | 0A0h |
| Erase Sector Address | FLCTL_ERASE_SECTADDR | 0A4h |
| Information Memory Bank 0 Write/Erase Protection | FLCTL_BANK0_INFO_WEPROT | 0B0h |
| Main Memory Bank 0 Write/Erase Protection | FLCTL_BANK0_MAIN_WEPROT | 0B4h |
| Information Memory Bank 1 Write/Erase Protection | FLCTL_BANK1_INFO_WEPROT | 0C0h |
| Main Memory Bank 1 Write/Erase Protection | FLCTL_BANK1_MAIN_WEPROT | 0C4h |
| Benchmark Control and Status | FLCTL_BMRK_CTLSTAT | 0D0h |
| Benchmark Instruction Fetch Count | FLCTL_BMRK_IFETCH | 0D4h |
| Benchmark Data Read Count | FLCTL_BMRK_DREAD | 0D8h |
| Benchmark Count Compare | FLCTL_BMRK_CMP | 0DCh |
| Interrupt Flag | FLCTL_IFG | 0F0h |
| Interrupt Enable | FLCTL_IE | 0F4h |
| Clear Interrupt Flag | FLCTL_CLRIFG | 0F8h |
| Set Interrupt Flag | FLCTL_SETIFG | 0FCh |
| Read Timing Control | FLCTL_READ_TIMCTL | 100h |
| Read Margin Timing Control | FLCTL_READMARGIN_TIMCTL | 104h |
| Program Verify Timing Control | FLCTL_PRGVER_TIMCTL | 108h |
| Erase Verify Timing Control | FLCTL_ERSVER_TIMCTL | 10Ch |
| Program Timing Control | FLCTL_PROGRAM_TIMCTL | 114h |
| Erase Timing Control | FLCTL_ERASE_TIMCTL | 118h |
| Mass Erase Timing Control | FLCTL_MASSERASE_TIMCTL | 11Ch |
| Burst Program Timing Control | FLCTL_BURSTPRG_TIMCTL | 120h |

**Table 6-31. ADC14 Registers (Base Address: 0x4001_2000)**

| REGISTER NAME | ACRONYM | OFFSET |
|---|---|---|
| Control 0 | ADC14CTL0 | 00h |
| Control 1 | ADC14CTL1 | 04h |
| Window Comparator Low Threshold 0 | ADC14LO0 | 08h |
| Window Comparator High Threshold 0 | ADC14HI0 | 0Ch |
| Window Comparator Low Threshold 1 | ADC14LO1 | 10h |
| Window Comparator High Threshold 1 | ADC14HI1 | 14h |
| Memory Control 0 | ADC14MCTL0 | 18h |
| Memory Control 1 | ADC14MCTL1 | 1Ch |
| Memory Control 2 | ADC14MCTL2 | 20h |
| Memory Control 3 | ADC14MCTL3 | 24h |
| Memory Control 4 | ADC14MCTL4 | 28h |
| Memory Control 5 | ADC14MCTL5 | 2Ch |
| Memory Control 6 | ADC14MCTL6 | 30h |

Copyright © 2015–2016, Texas Instruments Incorporated

**Table 6-31. ADC14 Registers (Base Address: 0x4001_2000) (continued)**

| REGISTER NAME | ACRONYM | OFFSET |
|---|---|---|
| Memory Control 7 | ADC14MCTL7 | 34h |
| Memory Control 8 | ADC14MCTL8 | 38h |
| Memory Control 9 | ADC14MCTL9 | 3Ch |
| Memory Control 10 | ADC14MCTL10 | 40h |
| Memory Control 11 | ADC14MCTL11 | 44h |
| Memory Control 12 | ADC14MCTL12 | 48h |
| Memory Control 13 | ADC14MCTL13 | 4Ch |
| Memory Control 14 | ADC14MCTL14 | 50h |
| Memory Control 15 | ADC14MCTL15 | 54h |
| Memory Control 16 | ADC14MCTL16 | 58h |
| Memory Control 17 | ADC14MCTL17 | 5Ch |
| Memory Control 18 | ADC14MCTL18 | 60h |
| Memory Control 19 | ADC14MCTL19 | 64h |
| Memory Control 20 | ADC14MCTL20 | 68h |
| Memory Control 21 | ADC14MCTL21 | 6Ch |
| Memory Control 22 | ADC14MCTL22 | 70h |
| Memory Control 23 | ADC14MCTL23 | 74h |
| Memory Control 24 | ADC14MCTL24 | 78h |
| Memory Control 25 | ADC14MCTL25 | 7Ch |
| Memory Control 26 | ADC14MCTL26 | 80h |
| Memory Control 27 | ADC14MCTL27 | 84h |
| Memory Control 28 | ADC14MCTL28 | 88h |
| Memory Control 29 | ADC14MCTL29 | 8Ch |
| Memory Control 30 | ADC14MCTL30 | 90h |
| Memory Control 31 | ADC14MCTL31 | 94h |
| Memory 0 | ADC14MEM0 | 98h |
| Memory 1 | ADC14MEM1 | 9Ch |
| Memory 2 | ADC14MEM2 | A0h |
| Memory 3 | ADC14MEM3 | A4h |
| Memory 4 | ADC14MEM4 | A8h |
| Memory 5 | ADC14MEM5 | ACh |
| Memory 6 | ADC14MEM6 | B0h |
| Memory 7 | ADC14MEM7 | B4h |
| Memory 8 | ADC14MEM8 | B8h |
| Memory 9 | ADC14MEM9 | BCh |
| Memory 10 | ADC14MEM10 | C0h |
| Memory 11 | ADC14MEM11 | C4h |
| Memory 12 | ADC14MEM12 | C8h |
| Memory 13 | ADC14MEM13 | CCh |
| Memory 14 | ADC14MEM14 | D0h |
| Memory 15 | ADC14MEM15 | D4h |
| Memory 16 | ADC14MEM16 | D8h |
| Memory 17 | ADC14MEM17 | DCh |
| Memory 18 | ADC14MEM18 | E0h |
| Memory 19 | ADC14MEM19 | E4h |
| Memory 20 | ADC14MEM20 | E8h |
| Memory 21 | ADC14MEM21 | ECh |


Copyright © 2015–2016, Texas Instruments Incorporated

**Table 6-31. ADC14 Registers (Base Address: 0x4001_2000) (continued)**

| REGISTER NAME | ACRONYM | OFFSET |
|---|---|---|
| Memory 22 | ADC14MEM22 | F0h |
| Memory 23 | ADC14MEM23 | F4h |
| Memory 24 | ADC14MEM24 | F8h |
| Memory 25 | ADC14MEM25 | FCh |
| Memory 26 | ADC14MEM26 | 100 |
| Memory 27 | ADC14MEM27 | 104 |
| Memory 28 | ADC14MEM28 | 108 |
| Memory 29 | ADC14MEM29 | 10C |
| Memory 30 | ADC14MEM30 | 110h |
| Memory 31 | ADC14MEM31 | 114h |
| Interrupt Enable 0 | ADC14IER0 | 13Ch |
| Interrupt Enable 1 | ADC14IER1 | 140h |
| Interrupt Flag 0 | ADC14IFGR0 | 144h |
| Interrupt Flag 1 | ADC14IFGR1 | 148h |
| Clear Interrupt Flag 0 | ADC14CLRIFGR0 | 14Ch |
| Clear Interrupt Flag 1 | ADC14CLRIFGR1 | 150h |
| Interrupt Vector | ADC14IV | 154h |

#### 6.3.3.2 Peripheral Bit Band Alias Region

The 32MB region from 0x4200_0000 through 0x43FF_FFFF forms the bit-band alias region for the 1MB peripheral region. Bit-banding is a feature of the Cortex-M4 processor and allows the application to set or clear individual bits throughout the peripheral memory space without using the pipeline bandwidth of the processor to carry out an exclusive read-modify-write sequence.

**NOTE**

The restriction of accessing 16-bit peripherals only through byte or half-word accesses also applies to the corresponding bit-band region of these peripherals. In other words, writes to the bit-band alias region for these peripherals must be in the form of byte or half-word accesses only.

### 6.3.4 Debug and Trace Peripheral Zone

This zone maps the internal and external PPB regions of the Cortex-M4 (see Table 6-32). The following peripherals are mapped to this zone:

- Core and System debug control registers (internal PPB)
- NVIC and other registers in the System Control space of the Cortex-M4 (internal PPB)
- FPB, DWT, ITM (internal PPB)
- TPIU, Debug ROM table (external PPB)
- Reset Controller (external PPB)
- System Controller (external PPB)

**Table 6-32. Debug Zone Memory Map**

| ADDRESS RANGE | MODULE OR PERIPHERAL | REMARKS |
|---|---|---|
| 0xE000_0000–0xE000_0FFF | ITM | Internal PPB |
| 0xE000_1000–0xE000_1FFF | DWT | Internal PPB |
| 0xE000_2000–0xE000_2FFF | FPB | Internal PPB |
| 0xE000_3000–0xE000_DFFF | Reserved | Internal PPB |
| 0xE000_E000–0xE000_EFFF | Cortex-M4 System Control Space | Internal PPB |
| 0xE000_F000–0xE003_FFFF | Reserved | Internal PPB |
| 0xE004_0000–0xE004_0FFF | TPIU | External PPB |
| 0xE004_1000–0xE004_1FFF | Reserved | External PPB |
| 0xE004_2000–0xE004_23FF | Reset Controller (see Table 6-33) | External PPB |
| 0xE004_2400–0xE004_2FFF | Reserved | External PPB |
| 0xE004_3000–0xE004_33FF | System Controller (see Table 6-34) | External PPB |
| 0xE004_3400–0xE004_3FFF | Reserved | External PPB |
| 0xE004_4000–0xE004_43FF | System Controller | External PPB |
| 0xE004_4400–0xE00F_EFFF | Reserved | External PPB |
| 0xE00F_F000–0xE00F_FFFF | ROM Table (External PPB) | External PPB |
| 0xE010_0000–0xFFFF_FFFF | Reserved | Vendor Space |

**NOTE**

For the address maps of the ARM modules listed in Table 6-32, see the Cortex-M4 technical reference manual at www.arm.com.

**Table 6-33. RSTCTL Registers**

| REGISTER NAME | ACRONYM | OFFSET |
|---|---|---|
| Reset Request | RSTCTL_RESET_REQ | 000h |
| Hard Reset Status | RSTCTL_HARDRESET_STAT | 004h |
| Hard Reset Status Clear | RSTCTL_HARDRESET_CLR | 008h |
| Hard Reset Status Set | RSTCTL_HARDRESET_SET | 00Ch |
| Soft Reset Status | RSTCTL_SOFTRESET_STAT | 010h |
| Soft Reset Status Clear | RSTCTL_SOFTRESET_CLR | 014h |
| Soft Reset Status Set | RSTCTL_SOFTRESET_SET | 018h |
| PSS Reset Status | RSTCTL_PSSRESET_STAT | 100h |
| PSS Reset Status Clear | RSTCTL_PSSRESET_CLR | 104h |
| PCM Reset Status | RSTCTL_PCMRESET_STAT | 108h |
| PCM Reset Status Clear | RSTCTL_PCMRESET_CLR | 10Ch |
| Pin Reset Status | RSTCTL_PINRESET_STAT | 110h |


Copyright © 2015–2016, Texas Instruments Incorporated

**Table 6-33. RSTCTL Registers (continued)**

| REGISTER NAME | ACRONYM | OFFSET |
|---|---|---|
| Pin Reset Status Clear | RSTCTL_PINRESET_CLR | 114h |
| Reboot Reset Status | RSTCTL_REBOOTRESET_STAT | 118h |
| Reboot Reset Status Clear | RSTCTL_REBOOTRESET_CLR | 11Ch |
| CS Reset Status | RSTCTL_CSRESET_STAT | 120h |
| CS Reset Status Clear | RSTCTL_CSRESET_CLR | 124h |

**Table 6-34. SYSCTL Registers**

| REGISTER NAME | ACRONYM | OFFSET |
|---|---|---|
| Reboot Control | SYS_REBOOT_CTL | 0000h |
| NMI Control and Status | SYS_NMI_CTLSTAT | 0004h |
| Watchdog Reset Control | SYS_WDTRESET_CTL | 0008h |
| Peripheral Halt Control | SYS_PERIHALT_CTL | 000Ch |
| SRAM Size | SYS_SRAM_SIZE | 0010h |
| SRAM Bank Enable | SYS_SRAM_BANKEN | 0014h |
| SRAM Bank Retention Control | SYS_SRAM_BANKRET | 0018h |
| Flash Size | SYS_FLASH_SIZE | 0020h |
| Digital I/O Glitch Filter Control | SYS_DIO_GLTFLT_CTL | 0030h |
| IP Protected Secure Zone Data Access Unlock | SYS_SECDATA_UNLOCK | 0040h |
| Master Unlock | SYS_MASTER_UNLOCK | 1000h |
| Boot Override Request 0 | SYS_BOOTOVER_REQ0 | 1004h |
| Boot Override Request 1 | SYS_BOOTOVER_REQ1 | 1008h |
| Boot Override Acknowledge | SYS_BOOTOVER_ACK | 100Ch |
| Reset Request | SYS_RESET_REQ | 1010h |
| Reset Status and Override | SYS_RESET_STATOVER | 1014h |
| System Status | SYS_SYSTEM_STAT | 1020h |

## 6.4 Memories on the MSP432P401x

The MSP432P401x MCUs include flash memory and SRAM for general application purposes. In addition, the devices include a backup memory (a portion of total available SRAM) that is retained in low-power modes.

### *6.4.1 Flash Memory*

The MSP432P401x MCUs include a high-endurance low-power flash memory that supports up to a minimum of 20000 write or erase cycles. The flash memory is 128 bits wide, thereby enabling high code execution performance by virtue of each fetch returning up to four 32-bit instructions (or up to eight 16-bit instructions). The flash is further divided into two types of subregions: main memory and information memory.

From a physical perspective, the flash memory comprises two banks, with the main and information memory regions divided equally between the two banks. This permits an application to carry out a simultaneous read or execute operation from one bank while the other bank may be undergoing a program or erase operation.

Figure 6-5 shows the memory map of the flash on MSP432P401x MCUs.

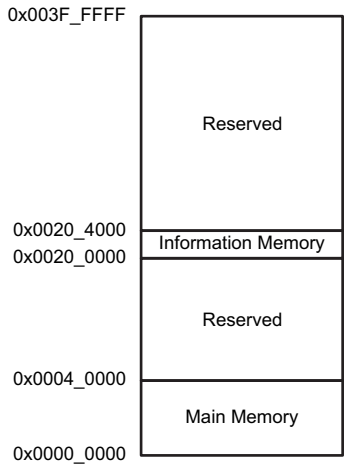


**Figure 6-5. Flash Memory Map**

#### 6.4.1.1 Flash Main Memory (0x0000_0000 to 0x0003_FFFF)

The flash main memory on MSP432P401x MCUs can be up to 256KB. Flash main memory consists of up to 64 sectors of 4KB each, with a minimum erase granularity of 4KB (1 sector). The main memory can be viewed as two independent identical banks of up to 128KB each, allowing simultaneous read or execute from one bank while the other bank is undergoing a program or erase operation.

#### 6.4.1.2 Flash Information Memory (0x0020_0000 to 0x0020_3FFF)

The flash information memory region is 16KB. Flash information memory consists of four sectors of 4KB each, with a minimum erase granularity of 4KB (1 sector). Table 6-35 describes different regions of flash information memory and the contents of each of the regions. The flash information memory region that contains the device descriptor (TLV) is factory configured for protection against write and erase operations.

**Table 6-35. Flash Information Memory Regions**

| REGION | ADDRESS RANGE | CONTENTS | WRITE AND ERASE PROTECTED? |
|---|---|---|---|
| Bank 0, Sector 0 | 0x0020_0000–0x0020_0FFF | Flash Boot-override Mailbox | No |
| Bank 0, Sector 1 | 0x0020_1000–0x0020_1FFF | Device Descriptor (TLV) | Yes |
| Bank 1, Sector 0 | 0x0020_2000–0x0020_2FFF | TI BSL | No |
| Bank 1, Sector 1 | 0x0020_3000–0x0020_3FFF | TI BSL | No |

#### 6.4.1.3 Flash Operation

The flash memory provides multiple read and program modes of operation that the application can deploy. Up to 128 bits (memory word width) can be programmed (set from 1 to 0) in a single program operation. Although the CPU data buses are 32 bits wide, the flash can buffer 128-bit write data before initiating flash programming, thereby making it more seamless and power efficient for software to program large blocks of data at a time. In addition, the flash memory also supports a burst write mode that takes less time when compared to programming words individually. Refer to Table 5-44 for information on timing parameters.

The flash main and information memory regions offer write/erase protection control at a sector granularity to enable software to optimize operations like mass erase while protecting certain regions of the flash. In low-power modes of operation, the flash memory is disabled and put in a power-down state to minimize leakage.

For details on the flash memory and its various modes of operation and configuration, refer to the *Flash Controller (FLCTL)* chapter in the *MSP432P4xx Family Technical Reference Manual*.


Copyright © 2015–2016, Texas Instruments Incorporated

**NOTE**

Depending on the CPU (MCLK) frequency and the active mode in use, the flash may need to be accessed with single/multiple wait states. Whenever there is a change required in the operating frequency, it is the responsibility of the application to ensure that the flash access wait states are configured correctly before the frequency change is effected. Refer to electrical specification for details on flash wait state requirements.

### *6.4.2 SRAM*

The MSP432P401x MCUs support up to 64KB of SRAM, with the rest of the 1MB SRAM region reserved. The SRAM is aliased in both Code and SRAM zones. This enables fast single-cycle execution of code from the SRAM, as the Cortex-M4 processor pipelines instruction fetches to memory zones other than the Code space. As with the flash memory, the SRAM can be powered down or placed in a low-leakage retention state in low-power modes of operation.

Figure 6-6 shows the memory map of SRAM on MSP432P401x MCUs.

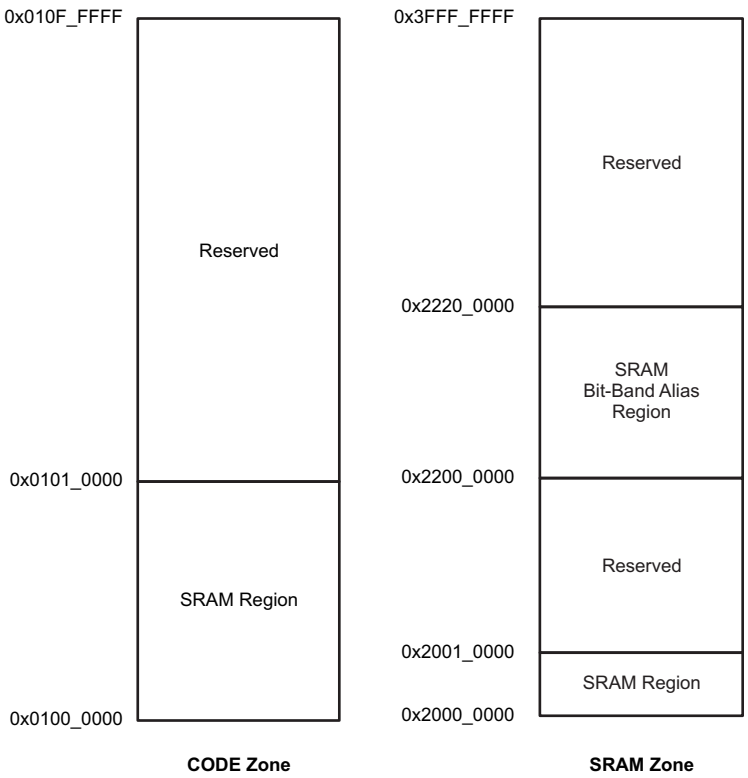


**Figure 6-6. SRAM Map**

#### 6.4.2.1 SRAM Bank Enable Configuration

The application can optimize the power consumption of the SRAM. To enable this, the SRAM is divided into 8-KB banks that can be individually powered down. Banks that are powered down remain powered down in both active and low-power modes of operation, thereby limiting any unnecessary inrush current when the device transitions between active and retention-based low-power modes. The application can also disable one (or more) banks for a certain stage in the processing and enable it for another stage.

When a particular bank is disabled, reads to its address space return 0h, and writes are discarded. To prevent 'holes' in the memory map, if a particular bank is enabled, all the lower banks are also forced to enabled state. This ensures a contiguous memory map through the set of enabled banks instead of a allowing a disabled bank to appear between enabled banks. For example:

- If there are eight banks in the device, values of 00111111 and 00000111 are acceptable.
- Values like 00010111 are not valid, and the resultant bank configuration is automatically set to 00011111.
- For example, for a 4-bank SRAM, the only allowed values are 0001, 0011, 0111, and 1111.

Bank 0 of SRAM is always enabled and cannot be disabled. For all other banks, any enable or disable change results in the SRAM_RDY bit of the SYS_SRAM_BANKEN register being set to 0 until the configuration change is effective. Any accesses to the SRAM is stalled during this time, and access resumes only after the SRAM banks are ready for read or write operations. This is handled transparently and does not require any code intervention. Refer to SRAM characteristics in the electrical specification for the SRAM bank enable or disable latency.

#### 6.4.2.2 SRAM Bank Retention Configuration and Backup Memory

The application can optimize the leakage power consumption of the SRAM in LPM3 and LPM4 modes of operation. To enable this, each SRAM bank can be individually configured for retention. Banks that are enabled for retention retain their data through the LPM3 and LPM4 modes. The application can also retain a subset of the enabled banks.

For example, the application may need 32KB of SRAM for its processing needs (four banks are kept enabled). However, of these four banks, only one bank may contain critical data that must be retained in LPM3 or LPM4, while the rest are powered off completely to minimize power consumption.

Bank 0 of SRAM is always retained and cannot be powered down. Therefore, it also operates up as a possible backup memory in the LPM3, LPM4, and LPM3.5 modes of operation. In the case of LPM3 and LPM4 modes the full 8KB of SRAM bank 0 is retained but in the case of LPM3.5 mode only 6KB of SRAM bank 0 is retained. The 2KB of SRAM bank 0 over the address range 0x2000_0000 to 0x2000_007FF is not retained in LPM3.5 mode.

### *6.4.3 ROM*

The MSP432P401x MCUs support 32KB of ROM, with the rest of the 1MB region reserved (for future upgrades). The lower 2KB of the ROM is reserved for TI internal purposes and accesses to this space returns an error response. The rest of the ROM is used for driver libraries.

**NOTE**

The entire ROM region returns an error response for write accesses. The lower 2KB of the ROM always returns an error response for any access.

## 6.5 DMA

The MSP432P401x MCUs implement an 8-channel ARM µDMA. This allows eight simultaneously active channels for data transfer between memory and peripherals without needing to use the bandwidth of the CPU (thereby reducing power by idling the CPU when there is no data processing required). In addition, the DMA remains active in multiple low-power modes of operation, allowing for a very low power state in which data can be transferred at low rates.

For maximum flexibility, up to eight DMA event sources can map to any of the eight channels. This is controlled through configuration registers in the DMA. In addition, the DMA can generate up to four interrupt requests (described in Section 6.5.2). For details regarding configuration of the DMA, refer to the DMA chapter in the *MSP432P4xx Family Technical Reference Manual*.


Copyright © 2015–2016, Texas Instruments Incorporated

### 6.5.1 DMA Source Mapping

Each channel of the eight available channels has a control register that can select any of the device-level DMA sources as the final source for that corresponding channel. Table 6-36 lists the sources available for mapping to each channel, based on the value of the Source Configuration (SRCCFG) register. The DMA transfers are initiated upon rising edge of the selected DMA source.

**Table 6-36. DMA Sources**

| | SRCCFG = 0 | SRCCFG = 1 | SRCCFG = 2 | SRCCFG = 3 | SRCCFG = 4 | SRCCFG = 5 | SRCCFG = 6 | SRCCFG = 7 |
|---|---|---|---|---|---|---|---|---|
| Channel 0 | Reserved | eUSCI_A0 TX | eUSCI_B0 TX0 | eUSCI_B3 TX1 | eUSCI_B2 TX2 | eUSCI_B1 TX3 | TA0CCR0 | AES256_Trigger0 |
| Channel 1 | Reserved | eUSCI_A0 RX | eUSCI_B0 RX0 | eUSCI_B3 RX1 | eUSCI_B2 RX2 | eUSCI_B1 RX3 | TA0CCR2 | AES256_Trigger1 |
| Channel 2 | Reserved | eUSCI_A1 TX | eUSCI_B1 TX0 | eUSCI_B0 TX1 | eUSCI_B3 TX2 | eUSCI_B2 TX3 | TA1CCR0 | AES256_Trigger2 |
| Channel 3 | Reserved | eUSCI_A1 RX | eUSCI_B1 RX0 | eUSCI_B0 RX1 | eUSCI_B3 RX2 | eUSCI_B2 RX3 | TA1CCR2 | Reserved |
| Channel 4 | Reserved | eUSCI_A2 TX | eUSCI_B2 TX0 | eUSCI_B1 TX1 | eUSCI_B0 TX2 | eUSCI_B3 TX3 | TA2CCR0 | Reserved |
| Channel 5 | Reserved | eUSCI_A2 RX | eUSCI_B2 RX0 | eUSCI_B1 RX1 | eUSCI_B0 RX2 | eUSCI_B3 RX3 | TA2CCR2 | Reserved |
| Channel 6 | Reserved | eUSCI_A3 TX | eUSCI_B3 TX0 | eUSCI_B2 TX1 | eUSCI_B1 TX2 | eUSCI_B0 TX3 | TA3CCR0 | DMAE0 (External Pin) |
| Channel 7 | Reserved | eUSCI_A3 RX | eUSCI_B3 RX0 | eUSCI_B2 RX1 | eUSCI_B1 RX2 | eUSCI_B0 RX3 | TA3CCR2 | ADC14 |

**NOTE**

Any source marked as Reserved is unused. It may be used for software-controlled DMA tasks, but typically it is reserved for enhancement purposes on future devices.

### 6.5.2 DMA Completion Interrupts

In the case of the ARM µDMA controller, it is usually the responsibility of software to maintain a list of channels that have completed their operation. To provide further flexibility, the MSP432P401x DMA supports four DMA completion interrupts, which are mapped in the following way:

- DMA_INT0: Logical OR of all completion events except those that are already mapped to DMA_INT1, DMA_INT2, or DMA_INT3.
- DMA_INT1, DMA_INT2, DMA_INT3: Can be mapped to the DMA completion event of any of the eight channels.

**NOTE**

Software must make sure that DMA_INT1, DMA_INT2, and DMA_INT3 are mapped to different channels, so that the same channel does not result in multiple interrupts at the NVIC.

### 6.5.3 DMA Access Privileges

The DMA has access to all of the memories and peripheral configuration interfaces of the device. If the device is configured for IP protection, DMA access to the flash is restricted to only the lower half (second bank) of the flash main and information memory regions. This prevents the DMA from being used as an unauthorized access source into the top half (first bank) of the flash, where secure data regions are housed.

## 6.6 Memory Map Access Details

The bus system on the MSP432P401x MCUs incorporates four masters, which can initiate various types of transactions:

- ICODE: Cortex-M4 instruction fetch bus. Accesses the Code zone only
- DCODE: Cortex-M4 data and literal fetch bus. Accesses the Code zone only. Debugger accesses to Code zone also appear on this bus.

- SBUS: Cortex-M4 data read and write bus. Accesses to all zones except Code zones and PPB memory space only. Debugger accesses to this space also appear on this bus.
- DMA: Access to all zones except the PPB memory space

**NOTE**

The PPB space is dedicated only to the Cortex-M4 Private Peripheral Bus.

### 6.6.1 Master and Slave Access Priority Settings

Table 6-37 lists all of the available masters (rows) and their access permissions to slaves (columns). If multiple masters can access one slave, the table lists access priorities if arbitration is required. A lower number in the table indicates a higher arbitration priority (the priority is always fixed).

**Table 6-37. Master and Slave Access Priority**

| | FLASH MEMORY | ROM | SRAM | PERIPHERALS |
|---|---|---|---|---|
| ICODE | 3 | 2 | 4 | N/A |
| DCODE | 2 (1) | 1 | 2 | N/A |
| SBUS | N/A | N/A | 3 | 2 |
| DMA | 1 (2) | N/A | 1 (3) | 1 |

(1) Access from the DCODE to flash memory may be restricted if the device is operating in a secure mode.
(2) Access from DMA to flash memory are restricted to Bank 1 if the device is operating in a secure mode with IP protection enabled. In such cases, access to Bank 0 returns an error response.
(3) Although the SRAM is mapped to both Code and System spaces, accesses from DMA to SRAM must use only the System space. DMA accesses to SRAM in Code space will result in bus error.

### 6.6.2 Memory Map Access Response

Table 6-38 summarizes the access responses to the entire memory map of the MSP432P401x MCUs.

**Table 6-38. Memory Map Access Response**

| ADDRESS RANGE | DESCRIPTION | READ (1) | WRITE (1) | INSTRUCTION FETCH (1) |
|---|---|---|---|---|
| 0x0000_0000–0x0003_FFFF | Flash Main Memory | OK | OK (2)(3) | OK |
| 0x0004_0000–0x001F_FFFF | Reserved | Error | Error | Error |
| 0x0020_0000–0x0020_3FFF | Flash Information Memory | OK | OK (3) | OK |
| 0x0020_4000–0x00FF_FFFF | Reserved | Error | Error | Error |
| 0x0100_0000–0x0100_FFFF | SRAM | OK | OK | OK |
| 0x0101_0000–0x01FF_FFFF | Reserved | Error | Error | Error |
| 0x0200_0000–0x0200_03FF | ROM (Reserved) | Error | Error | Error |
| 0x0200_0400–0x0200_7FFF | ROM | OK | Error | OK |
| 0x0200_8000–0x1FFF_FFFF | Reserved | Error | Error | Error |
| 0x2000_0000–0x2000_FFFF | SRAM | OK | OK | OK |
| 0x2001_0000–0x21FF_FFFF | Reserved | Error | Error | Error |
| 0x2200_0000–0x23FF_FFFF | SRAM bit-band alias | OK (4) | OK | Error |
| 0x2400_0000–0x3FFF_FFFF | Reserved | Error | Error | Error |
| 0x4000_0000–0x4001_FFFF | Peripheral | OK | OK | Error |
| 0x4002_0000–0x41FF_FFFF | Reserved | Error | Error | Error |

(1) A reserved memory region returns 0h on reads and instruction fetches. Writes to this region are ignored.
(2) If the user memory address is part of a secure region, this access returns an error if it is initiated by an unauthorized source. For more details, see *Configuring Security and Bootloader (BSL) on MSP432P4xx*.
(3) Writes to this address are ignored if the sector has write protection enabled.
(4) Reads from the bit-band region return 00h if the bit is clear and 01h if the bit is set.


Copyright © 2015–2016, Texas Instruments Incorporated

**Table 6-38. Memory Map Access Response (continued)**

| ADDRESS RANGE | DESCRIPTION | READ (1) | WRITE (1) | INSTRUCTION FETCH (1) |
|---|---|---|---|---|
| 0x4200_0000–0x43FF_FFFF | Peripheral bit-band alias | OK (4) | OK | Error |
| 0x4400_0000–0xDFFF_FFFF | Reserved | Error | Error | Error |
| 0xE000_0000–0xE003_FFFF | Internal PPB (5) | OK | OK | Error |
| 0xE004_0000–0xE004_0FFF | TPIU (External PPB) | OK | OK | Error |
| 0xE004_1000–0xE004_1FFF | Reserved | Reserved | Reserved | Error |
| 0xE004_2000–0xE004_23FF | Reset Controller (External PPB) | OK | OK | Error |
| 0xE004_2400–0xE004_2FFF | Reserved | Reserved | Reserved | Error |
| 0xE004_3000–0xE004_33FF | SYSCTL (External PPB) | OK | OK | Error |
| 0xE004_3400–0xE004_3FFF | Reserved | Reserved | Reserved | Error |
| 0xE004_4000–0xE004_43FF | SYSCTL (External PPB) | OK | OK | Error |
| 0xE004_4400–0xE00F_EFFF | Reserved | Reserved | Reserved | Error |
| 0xE00F_F000–0xE00F_FFFF | ROM Table (External PPB) | OK | OK | Error |
| 0xE010_0000–0xFFFF_FFFF | Reserved | Error | Error | Error |

(5) Refer to the Cortex-M4 technical reference manual at www.arm.com for details of the memory map of the internal PPB.

## 6.7 Interrupts

The Cortex-M4 processor on MSP432P401x MCUs implements an NVIC with 64 external interrupt lines and 8 levels of priority. From an application perspective, the interrupt sources at the device level are divided into two classes, the NMI and the User Interrupts. Internally, the CPU exception model handles the various exceptions (internal and external events including CPU instruction, memory, and bus fault conditions) in a fixed and configurable order of priority. For details on the handling of various exception priorities (including CPU reset and fault models), see the ARM-V7M architecture reference manual at www.arm.com.

### *6.7.1 NMI*

The NMI input of the NVIC has the following possible sources:

- External NMI pin (if configured in NMI mode)
- Oscillator fault condition
- Power Supply System (PSS) generated interrupts
- Power Control Manager (PCM) generated interrupts

### *6.7.2 Device-Level User Interrupts*

Table 6-39 lists the various interrupt sources and their connection to the NVIC inputs

**NOTE**

Some sources may have multiple interrupt conditions, in which case the appropriate interrupt status/flag register of the source must be examined to differentiate between the generating conditions.

**Table 6-39. NVIC Interrupts**

| NVIC INTERRUPT INPUT | SOURCE | FLAGS IN SOURCE |
|---|---|---|
| INTISR[0] | PSS (1) | |
| INTISR[1] | CS (1) | |
| INTISR[2] | PCM (1) | |

(1) This source can also be mapped to the system NMI. Refer to the *MSP432P4xx Family Technical Reference Manual* for more details.

### Table 6-39. NVIC Interrupts (continued)

| NVIC INTERRUPT INPUT | SOURCE | FLAGS IN SOURCE |
|---|---|---|
| INTISR[3] | WDT_A | |
| INTISR[4] | FPU_INT (2) | Combined interrupt from flags in the FPSCR (part of Cortex-M4 FPU) |
| INTISR[5] | FLCTL | Flash Controller interrupt flags |
| INTISR[6] | COMP_E0 | Comparator_E0 interrupt flags |
| INTISR[7] | COMP_E1 | Comparator_E1 interrupt flags |
| INTISR[8] | Timer_A0 | TA0CCTL0.CCIFG |
| INTISR[9] | Timer_A0 | TA0CCTLx.CCIFG (x = 1 through 4), TA0CTL.TAIFG |
| INTISR[10] | Timer_A1 | TA1CCTL0.CCIFG |
| INTISR[11] | Timer_A1 | TA1CCTLx.CCIFG (x = 1 through 4), TA1CTL.TAIFG |
| INTISR[12] | Timer_A2 | TA2CCTL0.CCIFG |
| INTISR[13] | Timer_A2 | TA2CCTLx.CCIFG (x = 1 through 4), TA2CTL.TAIFG |
| INTISR[14] | Timer_A3 | TA3CCTL0.CCIFG |
| INTISR[15] | Timer_A3 | TA3CCTLx.CCIFG (x = 1 through 4), TA3CTL.TAIFG |
| INTISR[16] | eUSCI_A0 | UART or SPI mode TX, RX, and Status Flags |
| INTISR[17] | eUSCI_A1 | UART or SPI mode TX, RX, and Status Flags |
| INTISR[18] | eUSCI_A2 | UART or SPI mode TX, RX, and Status Flags |
| INTISR[19] | eUSCI_A3 | UART or SPI mode TX, RX, and Status Flags |
| INTISR[20] | eUSCI_B0 | SPI or $I^2C$ mode TX, RX, and Status Flags ($I^2C$ in multi-slave mode) |
| INTISR[21] | eUSCI_B1 | SPI or $I^2C$ mode TX, RX, and Status Flags ($I^2C$ in multi-slave mode) |
| INTISR[22] | eUSCI_B2 | SPI or $I^2C$ mode TX, RX, and Status Flags ($I^2C$ in multi-slave mode) |
| INTISR[23] | eUSCI_B3 | SPI or $I^2C$ mode TX, RX, and Status Flags ($I^2C$ in multi-slave mode) |
| INTISR[24] | ADC14 | IFG[0-31], LO/IN/HI-IFG, RDYIFG, OVIFG, TOVIFG |
| INTISR[25] | Timer32_INT1 | Timer32 Interrupt for Timer1 |
| INTISR[26] | Timer32_INT2 | Timer32 Interrupt for Timer2 |
| INTISR[27] | Timer32_INTC | Timer32 Combined Interrupt |
| INTISR[28] | AES256 | AESRDYIFG |
| INTISR[29] | RTC_C | OFIFG, RDYIFG, TEVIFG, AIFG, RT0PSIFG, RT1PSIFG |
| INTISR[30] | DMA_ERR | DMA error interrupt |
| INTISR[31] | DMA_INT3 | DMA completion interrupt3 |
| INTISR[32] | DMA_INT2 | DMA completion interrupt2 |
| INTISR[33] | DMA_INT1 | DMA completion interrupt1 |
| INTISR[34] | DMA_INT0 (3) | DMA completion interrupt0 |
| INTISR[35] | I/O Port P1 | P1IFG.x (x = 0 through 7) |
| INTISR[36] | I/O Port P2 | P2IFG.x (x = 0 through 7) |
| INTISR[37] | I/O Port P3 | P3IFG.x (x = 0 through 7) |
| INTISR[38] | I/O Port P4 | P4IFG.x (x = 0 through 7) |
| INTISR[39] | I/O Port P5 | P5IFG.x (x = 0 through 7) |
| INTISR[40] | I/O Port P6 | P6IFG.x (x = 0 through 7) |
| INTISR[41] | Reserved | |
| INTISR[42] | Reserved | |
| INTISR[43] | Reserved | |
| INTISR[44] | Reserved | |
| INTISR[45] | Reserved | |
| INTISR[46] | Reserved | |
| INTISR[47] | Reserved | |

(2) The FPU of the Cortex-M4 can generate interrupts due to multiple floating point exceptions. It is the responsibility of software to process and clear the interrupt flags in the FPSCR.
(3) DMA_INT0 has a different functionality from DMA_INT1, DMA_INT2, or DMA_INT3. Refer to Section 6.5.2 for more details.


Copyright © 2015–2016, Texas Instruments Incorporated

**Table 6-39. NVIC Interrupts (continued)**

| NVIC INTERRUPT INPUT | SOURCE | FLAGS IN SOURCE |
|---|---|---|
| INTISR[48] | Reserved | |
| INTISR[49] | Reserved | |
| INTISR[50] | Reserved | |
| INTISR[51] | Reserved | |
| INTISR[52] | Reserved | |
| INTISR[53] | Reserved | |
| INTISR[54] | Reserved | |
| INTISR[55] | Reserved | |
| INTISR[56] | Reserved | |
| INTISR[57] | Reserved | |
| INTISR[58] | Reserved | |
| INTISR[59] | Reserved | |
| INTISR[60] | Reserved | |
| INTISR[61] | Reserved | |
| INTISR[62] | Reserved | |
| INTISR[63] | Reserved | |

**NOTE**

The Interrupt Service Routine (ISR) must ensure that the relevant interrupt flag in the source peripheral is cleared before returning from the ISR. If this is not done, the same interrupt may be incorrectly triggered again as a new event, even though the event has already been processed by the ISR. As there may be a few cycles of delay between the execution of the write command and the actual write reflecting in the interrupt flag register of the peripheral, the recommendation is to carry out the write and wait for a few cycles before exiting the ISR. Alternatively, the application can do an explicit read to ensure that the flag is cleared before exiting the ISR.

## 6.8 System Control

System Control comprises the modules that govern the overall behavior of the device, including power management, operating modes, clocks, reset handling, and user configuration settings.

### *6.8.1 Device Resets*

The MSP432P401x MCUs support multiple classes of reset. Each class results in a different level of initiation of device logic, thus allowing the application developer to initiate different resets based reset requirements during code development and debug. The following subsections cover the classes of reset in the device

#### 6.8.1.1 Power On/Off Reset (POR)

The POR initiates a complete initialization of the application settings and device configuration information. This class of reset may be initiated either by the PSS, the PCM, the RSTn pin, the Clock System upon DCO external resistor short circuit fault, or the device emulation logic (through the debugger). From an application perspective, all sources of POR return the device to the same state of initialization.

**NOTE**

Depending on the source of the reset, the device may exhibit different wake-up latencies from the POR. This implementation enables optimization of the reset recovery time.

#### 6.8.1.2 Reboot Reset

The Reboot Reset is identical to the POR and allows the application to emulate a POR class reset without needing to power cycle the device or activate the RSTn pin. It can also be initiated through the debugger and, hence, does not affect the debug connection to the device. On the other hand, a POR results in a debug disconnect.


Copyright © 2015–2016, Texas Instruments Incorporated

#### 6.8.1.3 Hard Reset

The Hard Reset resets all modules that are set up or modified by the application. This includes all peripherals and the nondebug logic of the Cortex-M4. The MSP432P401x MCUs support up to 16 sources of Hard Reset. Table 6-40 lists the reset source allocation. The Reset Controller registers can be used to identify the source of reset in the device. For further details, refer to the *Reset Controller* chapter in the *MSP432P4xx Family Technical Reference Manual*.

**Table 6-40. MSP432P401x Hard Reset Sources**

| RESET SOURCE NUMBER | SOURCE |
|---|---|
| 0 | SYSRESETREQ (System reset output of Cortex-M4) |
| 1 | WDT_A Time-out (1) |
| 2 | WDT_A Password Violation (1) |
| 3 | FLCTL (2) |
| 4 | Reserved (3) |
| 5 | Reserved (3) |
| 6 | Reserved (3) |
| 7 | Reserved (3) |
| 8 | Reserved (3) |
| 9 | Reserved (3) |
| 10 | Reserved (3) |
| 11 | Reserved (3) |
| 12 | Reserved (3) |
| 13 | Reserved (3) |
| 14 | CS (4) |
| 15 | PCM (5) |

(1) The WDT_A generated resets can be mapped either as a Hard Reset or a Soft Reset.
(2) The FLCTL can generate a reset if a voltage anomaly is detected that can corrupt only flash reads and not the rest of the system.
(3) Reserved indicates that this source of Hard Reset is currently unused and left for future expansion.
(4) The CS is technically not a source of a Hard Reset, but if a Hard Reset occurs during clock source or frequency changes, the CS can extend the reset to allow the clocks to settle before releasing the system. This reduces the chance of nondeterministic behavior.
(5) The PCM is technically not a source of a Hard Reset, but if a Hard Reset causes power mode changes, the PCM can extend the reset to allow the system to settle before releasing the Reset. This reduces the chance of nondeterministic behavior.

Copyright © 2015–2016, Texas Instruments Incorporated

#### 6.8.1.4 Soft Reset

The Soft Reset resets only the execution component of the system, which is the nondebug logic in the Cortex-M4 and the WDT_A. This reset remains nonintrusive to all other peripherals and system components. The MSP432P401x MCUs support up to 16 sources of Soft Reset. Table 6-41 lists the reset source allocation. The Reset Controller registers can be used to identify the source of reset in the design. For further details, refer to the *Reset Controller* chapter in the *MSP432P4xx Family Technical Reference Manual*.

**Table 6-41. MSP432P401x Soft Reset Sources**

| RESET SOURCE NUMBER | SOURCE |
|---|---|
| 0 | CPU LOCKUP Condition (LOCKUP output of Cortex-M4) |
| 1 | WDT_A Time-out (1) |
| 2 | WDT_A Password Violation (1) |
| 3 | Reserved (2) |
| 4 | Reserved (2) |
| 5 | Reserved (2) |
| 6 | Reserved (2) |
| 7 | Reserved (2) |
| 8 | Reserved (2) |
| 9 | Reserved (2) |
| 10 | Reserved (2) |
| 11 | Reserved (2) |
| 12 | Reserved (2) |
| 13 | Reserved (2) |
| 14 | Reserved (2) |
| 15 | Reserved (2) |

(1) The WDT_A generated resets can be mapped either as a Hard Reset or a Soft Reset.
(2) Reserved indicates that this source of Soft Reset is currently unused and left for future expansion.

**NOTE**

To support and enhance debug of reset conditions, the Reset Controller is located on the PPB of the device. This allows the Reset Controller to remain accessible even if the device is stuck in a Hard or Soft reset state. The Reset Controller permits overrides for Hard and Soft resets, thereby allowing an application to regain control of the device and isolate the cause of the stuck reset.

### *6.8.2 Power Supply System (PSS)*

The PSS controls all the power supply related functionality of the device. It consists of the following components.

#### 6.8.2.1 VCCDET

The VCCDET monitors the input voltage applied at the DVCC and AVCC pins of the device. When the $V_{CC}$ is found to be below the operating range of the VCCDET trip points, it generates a brownout condition, thereby initiating a device reset (POR class reset).


Copyright © 2015–2016, Texas Instruments Incorporated

#### 6.8.2.2 Supply Supervisor and Monitor for High Side (SVSMH)

The SVSMH supervises and monitors the $V_{CC}$. SVSMH has a programmable threshold setting and can be used by the application to generate a reset or an interrupt if the $V_{CC}$ dips below the desired threshold. In supervisor mode, the SVSMH generates a device reset (POR class reset). In monitor mode, the SVSMH generates an interrupt. The SVSMH can also be disabled if monitoring and supervision of the supply voltage are not required (offers further power savings).

#### 6.8.2.3 Core Voltage Regulator

The MSP432P401x MCUs can be programmed to operate either with an LDO or with a DC-DC as the voltage regulator for the digital logic in the core domain of the device. The DC-DC offers significant boost in power efficiency for high-current high-performance applications. The LDO is a highly efficient regulator that offers power advantages at lower $V_{CC}$ ranges and in the ultra-low-power modes of operation.

The core operating voltage (output of the LDO or DC-DC) is automatically set by the device depending on the selected operating mode of the device (refer to Table 6-42 for further details). The device offers seamless switching between LDO and DC-DC operating modes and also implements a seamless DC-DC fail-safe mechanism.

### *6.8.3 Power Control Manager (PCM)*

The PCM controls the operating modes of the device and the switching between the modes. This is controlled by the application, which can choose modes to meet its power and performance requirements. Table 6-42 lists the operating modes of the device.

**Table 6-42. MSP432P401x Operating Modes**

| OPERATING MODE | DESCRIPTION |
|---|---|
| AM_LDO_VCORE0 | LDO based active mode, normal performance, core voltage level 0 |
| LPM0_LDO_VCORE0 | Same as above, except that CPU is OFF (no code execution) |
| AM_LDO_VCORE1 | LDO based active mode, maximum performance, core voltage level 1 |
| LPM0_LDO_VCORE1 | Same as above, except that CPU is OFF (no code execution) |
| AM_DCDC_VCORE0 | DC-DC based active mode, normal performance, core voltage level 0 |
| LPM0_DCDC_VCORE0 | Same as above, except that CPU is OFF (no code execution) |
| AM_DCDC_VCORE1 | DC-DC based active mode, maximum performance, core voltage level 1 |
| LPM0_DCDC_VCORE1 | Same as above, except that CPU is OFF (no code execution) |
| AM_LF_VCORE0 | LDO based low-frequency active mode, core voltage level 0 |
| LPM0_LF_VCORE0 | Same as above, except that CPU is OFF (no code execution) |
| AM_LF_VCORE1 | LDO based low-frequency active mode, core voltage level 1 |
| LPM0_LF_VCORE1 | Same as above, except that CPU is OFF (no code execution) |
| LPM3_VCORE0 | LDO based low-power mode with full state retention, core voltage level 0, RTC and WDT can be active |
| LPM3_VCORE1 | LDO based low-power mode with full state retention, core voltage level 1, RTC and WDT can be active |
| LPM4_VCORE0 | LDO based low-power mode with full state retention, core voltage level 0, all peripherals disabled. |
| LPM4_VCORE1 | LDO based low-power mode with full state retention, core voltage level 1, all peripherals disabled |
| LPM3.5 | LDO based low-power mode, core voltage level 0, no retention of peripheral registers, RTC and WDT can be active |
| LPM4.5 | Core voltage turned off, wake-up only through pin reset or wake-up capable I/Os |

Copyright © 2015–2016, Texas Instruments Incorporated

### 6.8.4 Clock System (CS)

The CS contains the sources of the various clocks in the device. It also controls the mapping between the sources and the different clocks in the device.

#### 6.8.4.1 LFXT

The LFXT supports 32.768 kHz low-frequency crystals.

#### 6.8.4.2 HFXT

The HFXT supports high-frequency crystals up to 48 MHz.

#### 6.8.4.3 DCO

The DCO is a power-efficient tunable internal oscillator that generates up to 48 MHz. The DCO also supports a high-precision mode when using an external precision resistor.

#### 6.8.4.4 Very Low-Power Low-Frequency Oscillator (VLO)

The VLO is an ultra-low-power internal oscillator that generates a low-accuracy clock at typical frequency of 9.4 kHz.

#### 6.8.4.5 Low-Frequency Reference Oscillator (REFO)

The REFO can be used as an alternate low-power lower-accuracy source of a 32.768 kHz clock instead of the LFXT. The REFO can also be programmed to generate a 128 kHz clock.

#### 6.8.4.6 Module Oscillator (MODOSC)

The MODOSC is an internal clock source that has a very low latency wake-up time. It is factory-calibrated to a frequency of 25 MHz. The MODOSC is typically used to supply a 'clock on request' to different modules. It can be used as a clock source for ADC operation at 1 Msps sampling rate.

#### 6.8.4.7 System Oscillator (SYSOSC)

The SYSOSC is an internal clock source that is factory calibrated to a frequency of 5 MHz. It can be used as a clock source for ADC operation at 200 ksps sampling rate. In addition, the SYSOSC is also used for timing of various system-level control and management operations.

#### 6.8.4.8 Fail-Safe Mechanisms

All clock sources that operate with external components have a built-in fail-safe mechanism that automatically switches to the relevant backup source, thereby ensuring that spurious or unstable clocks never impact the device operation. Table 6-43 shows the different types of clock source faults and the corresponding fail-safe clocks.

**Table 6-43. Fail-Safe Clocks**

| Fault Type | Fail-Safe Clock |
|---|---|
| LFXT oscillator fault | REFO clock |
| HFXT oscillator fault | SYSOSC clock |
| DCO external resistor open circuit fault | DCO clock in internal resistor mode |


Copyright © 2015–2016, Texas Instruments Incorporated

### 6.8.5 System Controller (SYSCTL)

The SYSCTL is a set of various miscellaneous features of the device, including SRAM bank configuration, RSTn/NMI function selection, and peripheral halt control. In addition, the SYSCTL enables device security features like JTAG and SWD lock and IP protection, which can be used to protect unauthorized accesses either to the entire device memory map or to certain selected regions of the flash. Refer to System Controller chapter in the *MSP432P4xx Family Technical Reference Manual* for more details.

**NOTE**

As is the case with the Cortex-M4 system control registers (in the internal PPB space), the System Controller module registers are mapped to the Cortex-M4 external PPB. This keeps the System Controller module accessible even when Hard or Soft resets are active.

## 6.9 Peripherals

### 6.9.1 Digital I/O

Up to 10 8-bit I/O ports are implemented:

- All individual I/O bits are independently programmable.
- Any combination of input, output, and interrupt conditions is possible.
- Programmable pullup or pulldown on all ports.
- Edge-selectable interrupt capability is available on ports P1 through P6.
- Wake-up capability from LPM3, LPM4, LPM3.5, and LPM4.5 modes on ports P1 through P6.
- Read and write access to port-control registers is supported by all instructions.
- Ports can be accessed byte-wise or in pairs (16-bit widths).
- Capacitive-touch functionality is supported on all pins of ports P1 through P10 and PJ.
- Four 20-mA high-drive I/Os on pins P2.0 to P2.3.
- Glitch filtering capability on selected digital I/Os.

#### 6.9.1.1 Glitch Filtering on Digital I/Os

Some of the interrupt and wake-up capable digital I/Os can suppress glitches through the use of analog glitch filter to prevent unintentional interrupt or wake-up during device operation. The analog filter suppresses a minimum of 250-ns wide glitches. The glitch filter on these selected digital I/Os is enabled by default. If the glitch filtering capability is not required in the application, it can be bypassed using the SYS_DIO_GLTFLT_CTL register. When GLTFLT_EN bit in this register is cleared, the glitch filters on all the digital I/Os are bypassed. The glitch filter is automatically bypassed on a digital I/O when it is configured for peripheral or analog functionality by programming the respective PySEL0.x and PySEL1.x registers.

**NOTE**

The glitch filter is implemented on the following digital I/Os on MSP432P401x MCUs: P1.0, P1.4, P1.5, P3.0, P3.4, P3.5, P6.6, and P6.7.

### 6.9.2 Port Mapping Controller (PMAPCTL)

The port mapping controller allows flexible and reconfigurable mapping of digital functions.

#### 6.9.2.1 Port Mapping Definitions

The port mapping controller on MSP432P401x MCUs allows reconfigurable mapping of digital functions on ports P2, P3, and P7. Table 6-44 lists the available mappings. Table 6-45 lists the default settings for all pins that support port mapping.

**Table 6-44. Port Mapping Mnemonics and Functions**

| VALUE | PxMAPy MNEMONIC | INPUT PIN FUNCTION | OUTPUT PIN FUNCTION |
|---|---|---|---|
| 0 | PM_NONE | None | DVSS |
| 1 | PM_UCA0CLK | eUSCI_A0 clock input/output (direction controlled by eUSCI) | |
| 2 | PM_UCA0RXD | eUSCI_A0 UART RXD (direction controlled by eUSCI – Input) | |
| | PM_UCA0SOMI | eUSCI_A0 SPI slave out master in (direction controlled by eUSCI) | |
| 3 | PM_UCA0TXD | eUSCI_A0 UART TXD (direction controlled by eUSCI – Output) | |
| | PM_UCA0SIMO | eUSCI_A0 SPI slave in master out (direction controlled by eUSCI) | |
| 4 | PM_UCB0CLK | eUSCI_B0 clock input/output (direction controlled by eUSCI) | |
| 5 | PM_UCB0SDA | eUSCI_B0 $I^2C$ data (open drain and direction controlled by eUSCI) | |
| | PM_UCB0SIMO | eUSCI_B0 SPI slave in master out (direction controlled by eUSCI) | |
| 6 | PM_UCB0SCL | eUSCI_B0 $I^2C$ clock (open drain and direction controlled by eUSCI) | |
| | PM_UCB0SOMI | eUSCI_B0 SPI slave out master in (direction controlled by eUSCI) | |
| 7 | PM_UCA1STE | eUSCI_A1 SPI slave transmit enable (direction controlled by eUSCI) | |
| 8 | PM_UCA1CLK | eUSCI_A1 clock input/output (direction controlled by eUSCI) | |
| 9 | PM_UCA1RXD | eUSCI_A1 UART RXD (direction controlled by eUSCI – Input) | |
| | PM_UCA1SOMI | eUSCI_A1 SPI slave out master in (direction controlled by eUSCI) | |
| 10 | PM_UCA1TXD | eUSCI_A1 UART TXD (direction controlled by eUSCI – Output) | |
| | PM_UCA1SIMO | eUSCI_A1 SPI slave in master out (direction controlled by eUSCI) | |
| 11 | PM_UCA2STE | eUSCI_A2 SPI slave transmit enable (direction controlled by eUSCI) | |
| 12 | PM_UCA2CLK | eUSCI_A2 clock input/output (direction controlled by eUSCI) | |
| 13 | PM_UCA2RXD | eUSCI_A2 UART RXD (direction controlled by eUSCI – Input) | |
| | PM_UCA2SOMI | eUSCI_A2 SPI slave out master in (direction controlled by eUSCI) | |
| 14 | PM_UCA2TXD | eUSCI_A2 UART TXD (direction controlled by eUSCI – Output) | |
| | PM_ UCA2SIMO | eUSCI_A2 SPI slave in master out (direction controlled by eUSCI) | |
| 15 | PM_UCB2STE | eUSCI_B2 SPI slave transmit enable (direction controlled by eUSCI) | |
| 16 | PM_UCB2CLK | eUSCI_B2 clock input/output (direction controlled by eUSCI) | |
| 17 | PM_UCB2SDA | eUSCI_B2 $I^2C$ data (open drain and direction controlled by eUSCI) | |
| | PM_UCB2SIMO | eUSCI_B2 SPI slave in master out (direction controlled by eUSCI) | |
| 18 | PM_UCB2SCL | eUSCI_B2 $I^2C$ clock (open drain and direction controlled by eUSCI) | |
| | PM_UCB2SOMI | eUSCI_B2 SPI slave out master in (direction controlled by eUSCI) | |
| 19 | PM_TA0.0 | TA0 CCR0 capture input CCI0A | TA0 CCR0 compare output Out0 |
| 20 | PM_TA0.1 | TA0 CCR1 capture input CCI1A | TA0 CCR1 compare output Out1 |
| 21 | PM_TA0.2 | TA0 CCR2 capture input CCI2A | TA0 CCR2 compare output Out2 |
| 22 | PM_TA0.3 | TA0 CCR3 capture input CCI3A | TA0 CCR3 compare output Out3 |
| 23 | PM_TA0.4 | TA0 CCR4 capture input CCI4A | TA0 CCR4 compare output Out4 |
| 24 | PM_TA1.1 | TA1 CCR1 capture input CCI1A | TA1 CCR1 compare output Out1 |
| 25 | PM_TA1.2 | TA1 CCR2 capture input CCI2A | TA1 CCR2 compare output Out2 |
| 26 | PM_TA1.3 | TA1 CCR3 capture input CCI3A | TA1 CCR3 compare output Out3 |
| 27 | PM_TA1.4 | TA1 CCR4 capture input CCI4A | TA1 CCR4 compare output Out4 |


Copyright © 2015–2016, Texas Instruments Incorporated

### Table 6-44. Port Mapping Mnemonics and Functions (continued)

| VALUE | PxMAPy MNEMONIC | INPUT PIN FUNCTION | OUTPUT PIN FUNCTION |
|---|---|---|---|
| 28 | PM_TA0CLK | Timer_A0 external clock input | None |
| | PM_C0OUT | None | Comparator-E0 output |
| 29 | PM_TA1CLK | Timer_A1 external clock input | None |
| | PM_C1OUT | None | Comparator-E1 output |
| 30 | PM_DMAE0 | DMAE0 input | None |
| | PM_SMCLK | None | SMCLK |
| 31 (0FFh)(1) | PM_ANALOG | Disables the output driver and the input Schmitt-trigger to prevent parasitic cross currents when applying analog signals. | |

(1) The value of the PM_ANALOG mnemonic is 31. The port mapping registers are 5 bits wide, and the upper bits are ignored, which results in a read value of 31.

### Table 6-45. Default Mapping

| PIN NAME | PxMAPy MNEMONIC | INPUT PIN FUNCTION | OUTPUT PIN FUNCTION |
|---|---|---|---|
| P2.0/PM_UCA1STE | PM_UCA1STE | eUSCI_A1 SPI slave transmit enable (direction controlled by eUSCI) | |
| P2.1/PM_UCA1CLK | PM_UCA1CLK | eUSCI_A1 clock input/output (direction controlled by eUSCI) | |
| P2.2/PM_UCA1RXD/ PM_UCA1SOMI | PM_UCA1RXD/ PM_UCA1SOMI | eUSCI_A1 UART RXD (direction controlled by eUSCI – Input) eUSCI_A1 SPI slave out master in (direction controlled by eUSCI) | |
| P2.3/PM_UCA1TXD/ PM_UCA1SIMO | PM_UCA1TXD/ PM_UCA1SIMO | eUSCI_A1 UART TXD (direction controlled by eUSCI – output)/ eUSCI_A1 SPI slave in master out (direction controlled by eUSCI) | |
| P2.4/PM_TA0.1(1) | PM_TA0.1 | TA0 CCR1 capture input CCI1A | TA0 CCR1 compare output Out1 |
| P2.5/PM_TA0.2(1) | PM_TA0.2 | TA0 CCR2 capture input CCI2A | TA0 CCR2 compare output Out2 |
| P2.6/PM_TA0.3(1) | PM_TA0.3 | TA0 CCR3 capture input CCI3A | TA0 CCR3 compare output Out3 |
| P2.7/PM_TA0.4(1) | PM_TA0.4 | TA0 CCR4 capture input CCI4A | TA0 CCR4 compare output Out4 |
| P3.0/PM_UCA2STE | PM_UCA2STE | eUSCI_A2 SPI slave transmit enable (direction controlled by eUSCI) | |
| P3.1/PM_UCA2CLK | PM_UCA2CLK | eUSCI_A2 clock input/output (direction controlled by eUSCI) | |
| P3.2/PM_UCA2RXD/ PM_UCA2SOMI | PM_UCA2RXD/ PM_UCA2SOMI | eUSCI_A2 UART RXD (direction controlled by eUSCI – input)/ eUSCI_A2 SPI slave out master in (direction controlled by eUSCI) | |
| P3.3/PM_UCA2TXD/ PM_UCA2SIMO | PM_UCA2TXD/ PM_UCA2SIMO | eUSCI_A2 UART TXD (direction controlled by eUSCI – output)/ eUSCI_A2 SPI slave in master out (direction controlled by eUSCI) | |
| P3.4/PM_UCB2STE | PM_UCB2STE | eUSCI_B2 SPI slave transmit enable (direction controlled by eUSCI) | |
| P3.5/PM_UCB2CLK | PM_UCB2CLK | eUSCI_B2 clock input/output (direction controlled by eUSCI) | |
| P3.6/PM_UCB2SIMO/ PM_UCB2SDA | PM_UCB2SIMO/ PM_UCB2SDA | eUSCI_B2 SPI slave in master out (direction controlled by eUSCI)/ eUSCI_B2 $I^2C$ data (open drain and direction controlled by eUSCI) | |
| P3.7/PM_UCB2SOMI/ PM_UCB2SCL | PM_UCB2SOMI/ PM_UCB2SCL | eUSCI_B2 SPI slave out master in (direction controlled by eUSCI)/ eUSCI_B2 $I^2C$ clock (open drain and direction controlled by eUSCI) | |
| P7.0/PM_SMCLK/ PM_DMAE0 | PM_SMCLK/ PM_DMAE0 | DMAE0 input | SMCLK |
| P7.1/PM_C0OUT/ PM_TA0CLK | PM_C0OUT/ PM_TA0CLK | Timer_A0 external clock input | Comparator-E0 output |
| P7.2/PM_C1OUT/ PM_TA1CLK | PM_C1OUT/ PM_TA1CLK | Timer_A1 external clock input | Comparator-E1 output |
| P7.3/PM_TA0.0 | PM_TA0.0 | TA0 CCR0 capture input CCI0A | TA0 CCR0 compare output Out0 |
| P7.4/PM_TA1.4/C0.5(1) | PM_TA1.4 | TA1 CCR4 capture input CCI4A | TA1 CCR4 compare output Out4 |
| P7.5/PM_TA1.3/C0.4(1) | PM_TA1.3 | TA1 CCR3 capture input CCI3A | TA1 CCR3 compare output Out3 |
| P7.6/PM_TA1.2/C0.3(1) | PM_TA1.2 | TA1 CCR2 capture input CCI2A | TA1 CCR2 compare output Out2 |
| P7.7/PM_TA1.1/C0.2(1) | PM_TA1.1 | TA1 CCR1 capture input CCI1A | TA1 CCR1 compare output Out1 |

(1) Not available on the 64-pin RGC package.

Copyright © 2015–2016, Texas Instruments Incorporated

### 6.9.3 Timer_A

Timers TA0, TA1, TA2 and TA3 are 16-bit timers/counters (Timer_A type) with five capture/compare registers each. Each timer supports multiple capture/compares, PWM outputs, and interval timing. Each has extensive interrupt capabilities. Interrupts may be generated from the counter on overflow conditions and from each of the capture/compare registers.

#### 6.9.3.1 Timer_A Signal Connection Tables

Table 6-46 through Table 6-49 list the interface signals of the Timer_A modules on the device and connections of the interface signals to the corresponding pins or internal signals. The following rules apply to the naming conventions used.

- The first column lists the device level pin or internal signal that sources the clocks and/or triggers into the Timer. The default assumption is that these are pins, unless specifically marked as (internal). Nomenclature used for internal signals is as follows:
  - CxOUT: output from Comparator 'x'.
  - TAx_Cy: Output from Timer 'x', Capture/Compare module 'y'.
- The second column lists the input signals of the Timer module.
- The third column lists the submodule of the Timer and also implies the functionality (Timer, Capture (Inputs or Triggers), or Compare (Outputs or PWM)).
- The fourth column lists the output signals of the Timer module.
- The fifth column lists the device-level pin or internal signal that is driven by the outputs of the Timer. The default assumption is that these are pins, unless specifically marked as (internal).

**NOTE**

The pin names listed in the tables are the complete names. It is the responsibility of the software to ensure that the pin is used in the intended mode for the targeted Timer functionality.

**NOTE**

Internal signals that are sourced by the Timer outputs may connect to other modules (for example, other timers or the ADC) in the device (as trigger sources).


Copyright © 2015–2016, Texas Instruments Incorporated

### Table 6-46. TA0 Signal Connections

| DEVICE INPUT PIN OR INTERNAL SIGNAL | MODULE INPUT SIGNAL | MODULE BLOCK | MODULE OUTPUT SIGNAL | DEVICE OUTPUT PIN OR INTERNAL SIGNAL |
|---|---|---|---|---|
| P7.1/PM_C0OUT/PM_TA0CLK | TACLK | Timer | N/A | N/A |
| ACLK (internal) | ACLK | | | |
| SMCLK (internal) | SMCLK | | | |
| C0OUT (internal) | INCLK | | | |
| P7.3/PM_TA0.0 | CCI0A | CCR0 | TA0 | P7.3/PM_TA0.0<br>TA0_C0 (internal) |
| $DV_{SS}$ | CCI0B | | | |
| $DV_{SS}$ | GND | | | |
| $DV_{CC}$ | $V_{CC}$ | | | |
| P2.4/PM_TA0.1 | CCI1A | CCR1 | TA1 | P2.4/PM_TA0.1<br>TA0_C1 (internal)<br>ADC14 (internal)<br>ADC14SHSx = {1} |
| ACLK (internal) | CCI1B | | | |
| $DV_{SS}$ | GND | | | |
| $DV_{CC}$ | $V_{CC}$ | | | |
| P2.5/PM_TA0.2 | CCI2A | CCR2 | TA2 | P2.5/PM_TA0.2<br>TA0_C2 (internal)<br>ADC14 (internal)<br>ADC14SHSx = {2} |
| C0OUT (internal) | CCI2B | | | |
| $DV_{SS}$ | GND | | | |
| $DV_{CC}$ | $V_{CC}$ | | | |
| P2.6/PM_TA0.3 | CCI3A | CCR3 | TA3 | P2.6/PM_TA0.3<br>TA0_C3 (internal) |
| C1OUT (internal) | CCI3B | | | |
| $DV_{SS}$ | GND | | | |
| $DV_{CC}$ | $V_{CC}$ | | | |
| P2.7/PM_TA0.4 | CCI4A | CCR4 | TA4 | P2.7/PM_TA0.4<br>TA0_C4 (internal) |
| TA1_C4 (Internal) | CCI4B | | | |
| $DV_{SS}$ | GND | | | |
| $DV_{CC}$ | $V_{CC}$ | | | |

### Table 6-47. TA1 Signal Connections

| DEVICE INPUT PIN OR INTERNAL SIGNAL | MODULE INPUT SIGNAL | MODULE BLOCK | MODULE OUTPUT SIGNAL | DEVICE OUTPUT PIN OR INTERNAL SIGNAL |
|---|---|---|---|---|
| P7.2/PM_C1OUT/PM_TA1CLK | TACLK | Timer | N/A | N/A |
| ACLK (internal) | ACLK | | | |
| SMCLK (internal) | SMCLK | | | |
| C1OUT (internal) | INCLK | | | |
| P8.0/UCB3STE/TA1.0/C0.1 | CCI0A | CCR0 | TA0 | P8.0/UCB3STE/TA1.0/C0.1<br>TA1_C0 (internal) |
| $DV_{SS}$ | CCI0B | | | |
| $DV_{SS}$ | GND | | | |
| $DV_{CC}$ | $V_{CC}$ | | | |
| P7.7/PM_TA1.1/C0.2 | CCI1A | CCR1 | TA1 | P7.7/PM_TA1.1/C0.2<br>TA1_C1 (internal)<br>ADC14 (internal)<br>ADC14SHSx = {3} |
| ACLK (internal) | CCI1B | | | |
| $DV_{SS}$ | GND | | | |
| $DV_{CC}$ | $V_{CC}$ | | | |
| P7.6/PM_TA1.2/C0.3 | CCI2A | CCR2 | TA2 | P7.6/PM_TA1.2/C0.3<br>TA1_C2 (internal)<br>ADC14 (internal)<br>ADC14SHSx = {4} |
| C0OUT (internal) | CCI2B | | | |
| $DV_{SS}$ | GND | | | |
| $DV_{CC}$ | $V_{CC}$ | | | |
| P7.5/PM_TA1.3/C0.4 | CCI3A | CCR3 | TA3 | P7.5/PM_TA1.3/C0.4<br>TA1_C3 (internal) |
| C1OUT (internal) | CCI3B | | | |
| $DV_{SS}$ | GND | | | |
| $DV_{CC}$ | $V_{CC}$ | | | |
| P7.4/PM_TA1.4/C0.5 | CCI4A | CCR4 | TA4 | P7.4/PM_TA1.4/C0.5<br>TA1_C4 (internal) |
| TA0_C4 (internal) | CCI4B | | | |
| $DV_{SS}$ | GND | | | |
| $DV_{CC}$ | $V_{CC}$ | | | |


Copyright © 2015–2016, Texas Instruments Incorporated

### Table 6-48. TA2 Signal Connections

| DEVICE INPUT PIN OR INTERNAL SIGNAL | MODULE INPUT SIGNAL | MODULE BLOCK | MODULE OUTPUT SIGNAL | DEVICE OUTPUT PIN OR INTERNAL SIGNAL |
|---|---|---|---|---|
| P4.2/ACLK/TA2CLK/A11 | TACLK | Timer | N/A | N/A |
| ACLK (internal) | ACLK | | | |
| SMCLK (internal) | SMCLK | | | |
| From Capacitive Touch I/O 0 (internal) | INCLK | | | |
| P8.1/UCB3CLK/TA2.0/C0.0 | CCI0A | CCR0 | TA0 | P8.1/UCB3CLK/TA2.0/C0.0<br>TA2_C0 (internal) |
| $DV_{SS}$ | CCI0B | | | |
| $DV_{SS}$ | GND | | | |
| $DV_{CC}$ | $V_{CC}$ | | | |
| P5.6/TA2.1/VREF+/VeREF+/C1.7 | CCI1A | CCR1 | TA1 | P5.6/TA2.1/VREF+/VeREF+/C1.7<br>TA2_C1 (internal)<br>ADC14 (internal)<br>ADC14SHSx = {5} |
| ACLK (internal) | CCI1B | | | |
| $DV_{SS}$ | GND | | | |
| $DV_{CC}$ | $V_{CC}$ | | | |
| P5.7/TA2.2/VREF-/VeREF-/C1.6 | CCI2A | CCR2 | TA2 | P5.7/TA2.2/VREF-/VeREF-/C1.6<br>TA2_C2 (internal)<br>ADC14 (internal)<br>ADC14SHSx = {6} |
| C0OUT (internal) | CCI2B | | | |
| $DV_{SS}$ | GND | | | |
| $DV_{CC}$ | $V_{CC}$ | | | |
| P6.6/TA2.3/UCB3SIMO/UCB3SDA/C1.1 | CCI3A | CCR3 | TA3 | P6.6/TA2.3/UCB3SIMO/<br>UCB3SDA/C1.1<br>TA2_C3 (internal) |
| TA3_C3 (internal) | CCI3B | | | |
| $DV_{SS}$ | GND | | | |
| $DV_{CC}$ | $V_{CC}$ | | | |
| P6.7/TA2.4/UCB3SOMI/UCB3SCL/C1.0 | CCI4A | CCR4 | TA4 | P6.7/TA2.4/UCB3SOMI/<br>UCB3SCL/C1.0<br>TA2_C4 (internal) |
| From Capacitive Touch I/O 0 (internal) | CCI4B | | | |
| $DV_{SS}$ | GND | | | |
| $DV_{CC}$ | $V_{CC}$ | | | |

**Table 6-49. TA3 Signal Connections**

| DEVICE INPUT PIN OR INTERNAL SIGNAL | MODULE INPUT SIGNAL | MODULE BLOCK | MODULE OUTPUT SIGNAL | DEVICE OUTPUT PIN OR INTERNAL SIGNAL |
|---|---|---|---|---|
| P8.3/TA3CLK/A22 | TACLK | Timer | N/A | N/A |
| ACLK (internal) | ACLK | | | |
| SMCLK (internal) | SMCLK | | | |
| From Capacitive Touch I/O 1 (internal) | INCLK | | | |
| P10.4/TA3.0/C0.7 | CCI0A | CCR0 | TA0 | P10.4/TA3.0/C0.7<br>TA3_C0 (internal) |
| $DV_{SS}$ | CCI0B | | | |
| $DV_{SS}$ | GND | | | |
| $DV_{CC}$ | $V_{CC}$ | | | |
| P10.5/TA3.1/C0.6 | CCI1A | CCR1 | TA1 | P10.5/TA3.1/C0.6<br>TA3_C1 (internal)<br>ADC14 (internal)<br>ADC14SHSx = {7} |
| ACLK (internal) | CCI1B | | | |
| $DV_{SS}$ | GND | | | |
| $DV_{CC}$ | $V_{CC}$ | | | |
| P8.2/TA3.2/A23 | CCI2A | CCR2 | TA2 | P8.2/TA3.2/A23<br>TA3_C2 (internal) |
| C0OUT (internal) | CCI2B | | | |
| $DV_{SS}$ | GND | | | |
| $DV_{CC}$ | $V_{CC}$ | | | |
| P9.2/TA3.3 | CCI3A | CCR3 | TA3 | P9.2/TA3.3<br>TA3_C3 (internal) |
| TA2_C3 (internal) | CCI3B | | | |
| $DV_{SS}$ | GND | | | |
| $DV_{CC}$ | $V_{CC}$ | | | |
| P9.3/TA3.4 | CCI4A | CCR4 | TA4 | P9.3/TA3.4<br>TA3_C4 (internal) |
| From Capacitive Touch I/O 1 (internal) | CCI4B | | | |
| $DV_{SS}$ | GND | | | |
| $DV_{CC}$ | $V_{CC}$ | | | |

### 6.9.4 Timer32

Timer32 is an ARM dual 32-bit timer module. It contains two 32-bit timers, each of which can be configured as two independent 16-bit timers. The two timers can generate independent events or a combined event, which can be processed according to application requirements. Timer32 runs out of the same clock as the Cortex-M4 CPU.

### 6.9.5 Enhanced Universal Serial Communication Interface (eUSCI)

The eUSCI modules are used for serial data communication. The eUSCI module supports synchronous communication protocols such as SPI (3-pin or 4-pin) and $I^2C$, and asynchronous communication protocols such as UART, enhanced UART with automatic baud-rate detection, and IrDA.

The eUSCI_An module provides support for SPI (3-pin or 4-pin), UART, enhanced UART, and IrDA.

The eUSCI_Bn module provides support for SPI (3-pin or 4-pin) and $I^2C$.

The MSP432P401x MCUs offer up to four eUSCI_A and four eUSCI_B modules.

### 6.9.6 Real-Time Clock (RTC_C)

The RTC_C module contains an integrated real-time clock. It integrates an internal calendar which compensates for months with less than 31 days and includes leap year correction. The RTC_C also supports flexible alarm functions, offset calibration, and temperature compensation. The RTC_C operation is available in LPM3 and LPM3.5 modes to minimize power consumption.


Copyright © 2015–2016, Texas Instruments Incorporated

### 6.9.7 Watchdog Timer (WDT_A)

The primary function of the WDT_A module is to perform a controlled system restart if a software problem occurs. If the selected time interval expires, a system reset is generated. If the watchdog function is not needed in an application, the module can be configured as an interval timer and can generate interrupts at selected time intervals.

The watchdog can generate a reset on either a time-out or a password violation. This reset can be configured to generate either a Hard Reset or a Soft Reset into the system. Refer to the *MSP432P4xx Family Technical Reference Manual* for more details. The WDT should typically be configured to generate a Hard reset into the system. A Soft reset resets the CPU but leaves the rest of the system and peripherals unaffected. As a result, if the WDT is configured to generate a Soft reset, the application should assume responsibility for the fact that a Soft reset can corrupt an ongoing transaction from the CPU into the system.

Table 6-50 lists the clocks that can be selected as the source for the WDT_A module.

**Table 6-50. WDT_A Clocks**

| WDTSSEL | NORMAL OPERATION (WATCHDOG AND INTERVAL TIMER MODE) |
|---|---|
| 00 | SMCLK |
| 01 | ACLK |
| 10 | VLOCLK |
| 11 | BCLK |

**CAUTION**

The WDT must be set to interval mode before transitioning into the LPM3 or LPM3.5 modes of operation. This allows the WDT event to wake the device and return it to active modes of operation. Using the WDT in watchdog mode may result in nondeterministic behavior due to the generated reset.

### 6.9.8 ADC14

The ADC14 module supports 14-bit analog-to-digital conversions up to 1 Msps sampling rate with differential and single-ended inputs. The module implements a 14-bit SAR core, sample and hold circuit, reference generator and a conversion result buffer. The window comparators with a lower and upper limit allow CPU independent result monitoring through different window comparator interrupt flags.

The available ADC14 external trigger sources are summarized in Table 6-51.

**Table 6-51. ADC14 Trigger Signal Connections**

| ADC14SHSx | | CONNECTED TRIGGER SOURCE |
|---|---|---|
| BINARY | DECIMAL | |
| 000 | 0 | Software (ADC14SC) |
| 001 | 1 | TA0_C1 |
| 010 | 2 | TA0_C2 |
| 011 | 3 | TA1_C1 |
| 100 | 4 | TA1_C2 |
| 101 | 5 | TA2_C1 |
| 110 | 6 | TA2_C2 |
| 111 | 7 | TA3_C1 |

Table 6-52, Table 6-53, and Table 6-54 list the available multiplexing between internal and external analog inputs of ADC14.

**Table 6-52. ADC14 Channel Mapping on 100-Pin PZ Devices**

| ADC14 CHANNEL | EXTERNAL CHANNEL SOURCE (CONTROL BIT = 0) | INTERNAL CHANNEL SOURCE (CONTROL BIT = 1)(1) | CONTROL BIT(2) |
|---|---|---|---|
| Channel 23 | A23 | Battery Monitor | ADC14BATMAP |
| Channel 22 | A22 | Temperature Sensor | ADC14TCMAP |
| Channel 21 | A21 | N/A (Reserved) | ADC14CH0MAP |
| Channel 20 | A20 | N/A (Reserved) | ADC14CH1MAP |
| Channel 19 | A19 | N/A (Reserved) | ADC14CH2MAP |
| Channel 18 | A18 | N/A (Reserved) | ADC14CH3MAP |

(1) If an internal source is marked as N/A or Reserved, it indicates that only the external source is available for that channel.
(2) Refer to the ADC14 chapter in the *MSP432P4xx Family Technical Reference Manual* for details on the registers that contain the control bits listed in the table.

**Table 6-53. ADC14 Channel Mapping on 80-Pin ZXH Devices**

| ADC14 CHANNEL | EXTERNAL CHANNEL SOURCE (CONTROL BIT = 0) | INTERNAL CHANNEL SOURCE (CONTROL BIT = 1)(1) | CONTROL BIT(2) |
|---|---|---|---|
| Channel 15 | A15 | Battery Monitor | ADC14BATMAP |
| Channel 14 | A14 | Temperature Sensor | ADC14TCMAP |
| Channel 13 | A13 | N/A (Reserved) | ADC14CH0MAP |
| Channel 12 | A12 | N/A (Reserved) | ADC14CH1MAP |
| Channel 11 | A11 | N/A (Reserved) | ADC14CH2MAP |
| Channel 10 | A10 | N/A (Reserved) | ADC14CH3MAP |

(1) If an internal source is marked as N/A or Reserved, it indicates that only the external source is available for that channel.
(2) Refer to the ADC14 chapter in the *MSP432P4xx Family Technical Reference Manual* for details on the registers that contain the control bits listed in the table.


Copyright © 2015–2016, Texas Instruments Incorporated

**Table 6-54. ADC14 Channel Mapping on 64-Pin RGC Devices**

| ADC14 CHANNEL | EXTERNAL CHANNEL SOURCE (CONTROL BIT = 0) | INTERNAL CHANNEL SOURCE (CONTROL BIT = 1)(1) | CONTROL BIT(2) |
|---|---|---|---|
| Channel 11 | A11 | Battery Monitor | ADC14BATMAP |
| Channel 10 | A10 | Temperature Sensor | ADC14TCMAP |
| Channel 9 | A9 | N/A (Reserved) | ADC14CH0MAP |
| Channel 8 | A8 | N/A (Reserved) | ADC14CH1MAP |
| Channel 7 | A7 | N/A (Reserved) | ADC14CH2MAP |
| Channel 6 | A6 | N/A (Reserved) | ADC14CH3MAP |

(1) If an internal source is marked as N/A or Reserved, it indicates that only the external source is available for that channel.
(2) Refer to the ADC14 chapter in the *MSP432P4xx Family Technical Reference Manual* for details on the registers that contain the control bits listed in the table.

### 6.9.9 Comparator_E (COMP_E)

The primary function of the COMP_E module is to support precision slope analog-to-digital conversions, battery voltage supervision, and monitoring of external analog signals.

There are two COMP_E modules available on the MSP432P401x MCUs.

### 6.9.10 Shared Reference (REF_A)

The REF_A generates of all the critical reference voltages that can be used by the various analog peripherals in the device. The reference voltage from REF_A can also be switched onto a device pin for external use.

### 6.9.11 CRC32

The CRC32 module produces a signature based on a sequence of entered data values and can be used for data checking purposes. It supports both a CRC32 and a CRC16 computation.

- The CRC16 computation signature is based on the CRC16-CCITT standard.
- The CRC32 computation signature is based on the CRC32-ISO3309 standard.

### 6.9.12 AES256 Accelerator

The AES accelerator module performs encryption and decryption of 128-bit data with 128-bit, 192-bit, or 256-bit keys according to the Advanced Encryption Standard (AES) (FIPS PUB 197) in hardware.

### 6.9.13 True Random Seed

The Device Descriptor Information (TLV) section contains a 128-bit true random seed that can be used to implement a deterministic random number generator.

## 6.10 Code Development and Debug

The MSP432P401x MCUs support various methods through which the user can carry out code development and debug on the device.

### 6.10.1 JTAG and SWD Based Development, Debug, and Trace

The device supports both 4-pin JTAG and the 2-pin SWD modes of operation. The device is compatible with all standard Cortex-M4 debuggers available in the market today. The debug logic in the device has been designed to remain minimally intrusive to the application state. In low-power modes, the user can enable the debugger to override the state of the PSS, thereby gaining access to debug and trace features.

In 2-pin SWD mode, the TDO pin can be used to export serial wire trace output (SWO) data. In addition, the TDI and TDO pins of the device can be reassigned as user I/Os. Refer to sections Section 6.12.22 and Section 6.12.23 for more details.

**NOTE**

If the device has activated debug security, debugger accesses into the device is completely disabled. The debugger, however, is still be able to scan the run/halt state of the CPU. Further control of and visibility into the device is possible only after initiating a mass erase of the device flash contents.

### 6.10.2 Peripheral Halt Control

The Peripheral Halt Control register in the System Controller module allows the user independent control over the functionality of device peripherals during code development and debug. When the CPU is halted, the bits in this register can control whether the corresponding peripheral freezes its operation (such as incrementing, transmit, and receive) or continues its operation (debug remains nonintrusive). The registers of the peripheral remain accessible without regard to the values in the Peripheral Halt Control register.

### 6.10.3 Bootloader (BSL)

The BSL enables users to program flash or SRAM on the device using a UART or $I^2C$ or SPI serial interface. Access to the device memory through the BSL is protected by a user-defined password. Table 6-55 lists the device pins that are required to use the BSL.

**Table 6-55. BSL Pins and Functions**

| DEVICE PIN | BSL FUNCTION |
|---|---|
| P1.2 | UART BSLRXD |
| P1.3 | UART BSLTXD |
| P1.4 | SPI BSLSTE |
| P1.5 | SPI BSLCLK |
| P1.6 | SPI BSLSIMO |
| P1.7 | SPI BSLSOMI |
| P3.6 | $I^2C$ BSLSDA |
| P3.7 | $I^2C$ BSLSCL |

The BSL is invoked under any of the following conditions.

- Flash main memory is erased
- Hardware invocation of BSL
- Software based API calls to BSL functions

The user can perform hardware invocation of BSL using any pin of ports P1, P2, or P3. The pin selected for this purpose should not be same as the ones used for BSL. The user can configure the device pin and its polarity through the flash boot-override mailbox. The BSL can then be invoked upon a power cycle or POR reset event with the configured pin.

For the complete description of the BSL features and its implementation, see the *MSP432P401R Bootloader (BSL) User's Guide*.

### 6.10.4 Device Security

The MSP432P401xx MCUs offer the following two types of device security for the user application code programmed on to the device.

- JTAG and SWD Lock
- IP Protection


Copyright © 2015–2016, Texas Instruments Incorporated

JTAG and SWD lock as the name indicates locks the JTAG and SWD interface of the device. IP protection is useful for protection of customer software IP, for example, in multi-vendor development scenarios. It is possible to have up to a maximum of four IP protected zones with configurable start address and size. The security configurations of the device are done using the flash boot-override mailbox.

Also the SYSCTL module provides infrastructure for encrypted in-field updates to the application code on devices that are JTAG and SWD locked and/or have defined IP protection zones. For complete details of the device security features, refer to *SYSCTL* chapter in the *MSP432P4xx Family Technical Reference Manual*.

## 6.11 Performance Benchmarks

The MSP432P401xx MCUs achieve the following performance benchmarks under the given software configurations and profile configurations. These performance benchmarks were measured with system supply voltage of 2.97 V at an ambient temperature of 25°C.

### *6.11.1 ULPBench Performance: 192.3 ULPMark-CP*

Table 6-56 shows the software configuration for this performance benchmark. Table 6-57 shows the profile configuration.

**Table 6-56. Software Configuration**

| ITEMS | DETAILS |
|---|---|
| Compiler Name and Version | IAR EWARM v7.50.3 |
| Compiler Flags | --endian=little --cpu=Cortex-M4F -e --fpu=VFPv4_sp -Ohs --no_size_constraints --mfc |
| ULPBench Profile and Version | v1.1.X |
| EnergyMonitor Software Version | 1.1.3 |

**Table 6-57. Profile Configuration**

| CONFIGURATION | DETAILS |
|---|---|
| Wakeup Timer Module | RTC |
| Wakeup Timer Clock Source | External Crystal |
| Wakeup Timer Frequency [Hz] | 32768 Hz |
| Wakeup Timer Accuracy [ppm] | 20 ppm |
| Active Power Mode Name | Active Mode |
| Active Mode Clock Configuration | CPU: 16 MHz, RTC: 32 KHz |
| Active Mode Voltage Integrity | 1.62 V |
| Inactive Power Mode Name | LPM3 |
| Inactive Clock Configuration | CPU: OFF, RTC: 32 kHz |
| Inactive Mode Voltage Integrity | 1.62 V |

### *6.11.2 CoreMark/MHz Performance: 3.41*

Table 6-58 shows the software configuration for this performance benchmark. Table 6-59 shows the profile configuration.

**Table 6-58. Software Configuration**

| ITEMS | DETAILS |
|---|---|
| Compiler Name and Version | IAR EWARM v6.70.3 |
| Compiler Flags | --no_size_constraints --debug --endian=little --cpu=Cortex-M4F -e --fpu=None -Ohs |
| CoreMark Profile and Version | v1.0 |

**Table 6-59. Profile Configuration**

| CONFIGURATION | DETAILS |
|---|---|
| Active Power Mode Name | Active Mode |
| Active Mode Clock Configuration | CPU: 3 MHz |
| Active Mode Voltage Integrity | 1.62 V |

### *6.11.3 DMIPS/MHz (Dhrystone 2.1) Performance: 1.22*

Table 6-60 shows the software configuration for this performance benchmark. Table 6-61 shows the profile configuration.

**Table 6-60. Software Configuration**

| ITEMS | DETAILS |
|---|---|
| Compiler Name and Version | Keil uVision ARM Compiler v5.06 (build 20) |
| Compiler Flags | -c --cpu Cortex-M4.fp -g -O3 -Otime --apcs=interwork --asm --interleave --asm_dir –no_inline –no_multifile |
| Dhrystone Profile and Version | v2.1 |

**Table 6-61. Profile Configuration**

| CONFIGURATION | DETAILS |
|---|---|
| Active Power Mode Name | Active Mode |
| Active Mode Clock Configuration | CPU: 3 MHz |
| Active Mode Voltage Integrity | 1.62 V |


Copyright © 2015–2016, Texas Instruments Incorporated

## 6.12 Input/Output Diagrams

### 6.12.1 Port P1 (P1.0 to P1.7) Input/Output With Schmitt Trigger

Figure 6-7 shows the port diagram. Table 6-62 summarizes the selection of the pin functions.

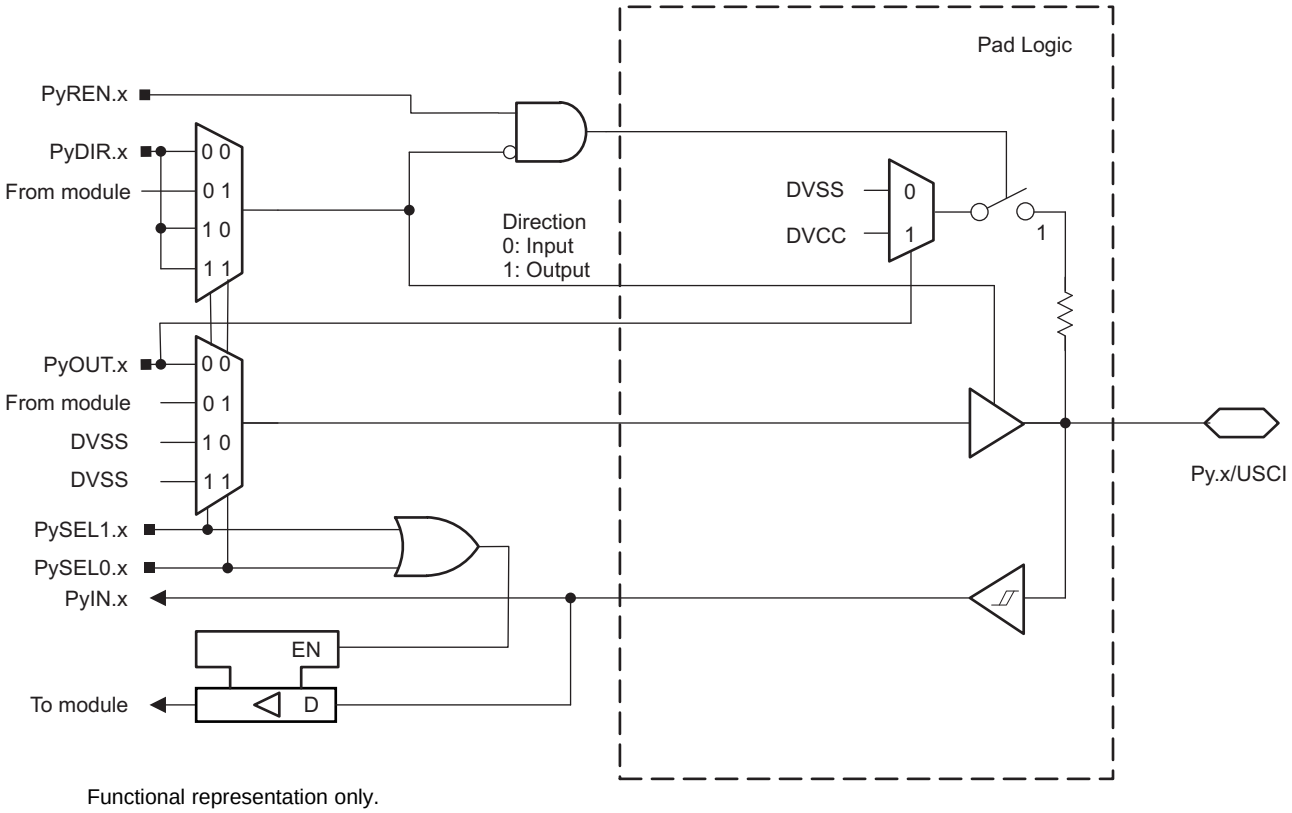


**Figure 6-7. Py.x/USCI Pin Diagram**

### Table 6-62. Port P1 (P1.0 to P1.7) Pin Functions

| PIN NAME (P1.x) | x | FUNCTION | CONTROL BITS OR SIGNALS[1] | | |
|---|---|---|---|---|---|
| | | | P1DIR.x | P1SEL1.x | P1SEL0.x |
| P1.0/UCA0STE | 0 | P1.0 (I/O) | I: 0; O: 1 | 0 | 0 |
| | | UCA0STE | X[2] | 0 | 1 |
| | | N/A | 0 | 1 | 0 |
| | | DVSS | 1 | | |
| | | N/A | 0 | 1 | 1 |
| | | DVSS | 1 | | |
| P1.1/UCA0CLK | 1 | P1.1 (I/O) | I: 0; O: 1 | 0 | 0 |
| | | UCA0CLK | X[2] | 0 | 1 |
| | | N/A | 0 | 1 | 0 |
| | | DVSS | 1 | | |
| | | N/A | 0 | 1 | 1 |
| | | DVSS | 1 | | |
| P1.2/UCA0RXD/UCA0SOMI | 2 | P1.2 (I/O) | I: 0; O: 1 | 0 | 0 |
| | | UCA0RXD/UCA0SOMI | X[2] | 0 | 1 |
| | | N/A | 0 | 1 | 0 |
| | | DVSS | 1 | | |
| | | N/A | 0 | 1 | 1 |
| | | DVSS | 1 | | |
| P1.3/UCA0TXD/UCA0SIMO | 3 | P1.3 (I/O) | I: 0; O: 1 | 0 | 0 |
| | | UCA0TXD/UCA0SIMO | X[2] | 0 | 1 |
| | | N/A | 0 | 1 | 0 |
| | | DVSS | 1 | | |
| | | N/A | 0 | 1 | 1 |
| | | DVSS | 1 | | |
| P1.4/UCB0STE | 4 | P1.4 (I/O) | I: 0; O: 1 | 0 | 0 |
| | | UCB0STE | X[3] | 0 | 1 |
| | | N/A | 0 | 1 | 0 |
| | | DVSS | 1 | | |
| | | N/A | 0 | 1 | 1 |
| | | DVSS | 1 | | |
| P1.5/UCB0CLK | 5 | P1.5 (I/O) | I: 0; O: 1 | 0 | 0 |
| | | UCB0CLK | X[3] | 0 | 1 |
| | | N/A | 0 | 1 | 0 |
| | | DVSS | 1 | | |
| | | N/A | 0 | 1 | 1 |
| | | DVSS | 1 | | |
| P1.6/UCB0SIMO/UCB0SDA | 6 | P1.6 (I/O) | I: 0; O: 1 | 0 | 0 |
| | | UCB0SIMO/UCB0SDA | X[3] | 0 | 1 |
| | | N/A | 0 | 1 | 0 |
| | | DVSS | 1 | | |
| | | N/A | 0 | 1 | 1 |
| | | DVSS | 1 | | |

(1) X = don't care
(2) Direction controlled by eUSCI_A0 module.
(3) Direction controlled by eUSCI_B0 module.


Copyright © 2015–2016, Texas Instruments Incorporated

**Table 6-62. Port P1 (P1.0 to P1.7) Pin Functions (continued)**

| PIN NAME (P1.x) | x | FUNCTION | CONTROL BITS OR SIGNALS[1] | | |
|---|---|---|---|---|---|
| | | | P1DIR.x | P1SEL1.x | P1SEL0.x |
| P1.7/UCB0SOMI/UCB0SCL | 7 | P1.7 (I/O) | I: 0; O: 1 | 0 | 0 |
| | | UCB0SOMI/UCB0SCL | X[3] | 0 | 1 |
| | | N/A | 0 | 1 | 0 |
| | | DVSS | 1 | | |
| | | N/A | 0 | 1 | 1 |
| | | DVSS | 1 | | |

### 6.12.2 Port P2 (P2.0 to P2.3) Input/Output With Schmitt Trigger

Figure 6-7 shows the port diagram. Table 6-63 summarizes the selection of the pin functions.

**Table 6-63. Port P2 (P2.0 to P2.3) Pin Functions**

| PIN NAME (P2.x) | x | FUNCTION | CONTROL BITS OR SIGNALS(1) | | | |
|---|---|---|---|---|---|---|
| | | | P2DIR.x | P2SEL1.x | P2SEL0.x | P2MAPx |
| P2.0/PM_UCA1STE | 0 | P2.0 (I/O) | I: 0; O: 1 | 0 | 0 | X |
| | | UCA1STE | X(2) | 0 | 1 | default |
| | | N/A | 0 | 1 | 0 | X |
| | | DVSS | 1 | | | |
| | | N/A | 0 | 1 | 1 | X |
| | | DVSS | 1 | | | |
| P2.1/PM_UCA1CLK | 1 | P2.1 (I/O) | I: 0; O: 1 | 0 | 0 | X |
| | | UCA1CLK | X(2) | 0 | 1 | default |
| | | N/A | 0 | 1 | 0 | X |
| | | DVSS | 1 | | | |
| | | N/A | 0 | 1 | 1 | X |
| | | DVSS | 1 | | | |
| P2.2/PM_UCA1RXD/PM_UCA1SOMI | 2 | P2.2 (I/O) | I: 0; O: 1 | 0 | 0 | X |
| | | UCA1RXD/UCA1SOMI | X(2) | 0 | 1 | default |
| | | N/A | 0 | 1 | 0 | X |
| | | DVSS | 1 | | | |
| | | N/A | 0 | 1 | 1 | X |
| | | DVSS | 1 | | | |
| P2.3/PM_UCA1TXD/PM_UCA1SIMO | 3 | P2.3 (I/O) | I: 0; O: 1 | 0 | 0 | X |
| | | UCA1TXD/UCA1SIMO | X(2) | 0 | 1 | default |
| | | N/A | 0 | 1 | 0 | X |
| | | DVSS | 1 | | | |
| | | N/A | 0 | 1 | 1 | X |
| | | DVSS | 1 | | | |

(1) X = don't care
(2) Direction controlled by eUSCI_A1 module.


Copyright © 2015–2016, Texas Instruments Incorporated

### 6.12.3 Port P3 (P3.0 to P3.7) Input/Output With Schmitt Trigger

Figure 6-7 shows the port diagram. Table 6-64 summarizes the selection of the pin functions.

**Table 6-64. Port P3 (P3.0 to P3.7) Pin Functions**

| PIN NAME (P3.x) | x | FUNCTION | CONTROL BITS OR SIGNALS[1] | | | |
|---|---|---|---|---|---|---|
| | | | P3DIR.x | P3SEL1.x | P3SEL0.x | P3MAPx |
| P3.0/PM_UCA2STE | 0 | P3.0 (I/O) | I: 0; O: 1 | 0 | 0 | X |
| | | UCA2STE | X[2] | 0 | 1 | default |
| | | N/A | 0 | 1 | 0 | X |
| | | DVSS | 1 | | | |
| | | N/A | 0 | 1 | 1 | X |
| | | DVSS | 1 | | | |
| P3.1/PM_UCA2CLK | 1 | P3.1 (I/O) | I: 0; O: 1 | 0 | 0 | X |
| | | UCA2CLK | X[2] | 0 | 1 | default |
| | | N/A | 0 | 1 | 0 | X |
| | | DVSS | 1 | | | |
| | | N/A | 0 | 1 | 1 | X |
| | | DVSS | 1 | | | |
| P3.2/PM_UCA2RXD/PM_UCA2SOMI | 2 | P3.2 (I/O) | I: 0; O: 1 | 0 | 0 | X |
| | | UCA2RXD/UCA2SOMI | X[2] | 0 | 1 | default |
| | | N/A | 0 | 1 | 0 | X |
| | | DVSS | 1 | | | |
| | | N/A | 0 | 1 | 1 | X |
| | | DVSS | 1 | | | |
| P3.3/PM_UCA2TXD/PM_UCA2SIMO | 3 | P3.3 (I/O) | I: 0; O: 1 | 0 | 0 | X |
| | | UCA2TXD/UCA2SIMO | X[2] | 0 | 1 | default |
| | | N/A | 0 | 1 | 0 | X |
| | | DVSS | 1 | | | |
| | | N/A | 0 | 1 | 1 | X |
| | | DVSS | 1 | | | |
| P3.4/PM_UCB2STE | 4 | P3.4 (I/O) | I: 0; O: 1 | 0 | 0 | X |
| | | UCB2STE | X[3] | 0 | 1 | default |
| | | N/A | 0 | 1 | 0 | X |
| | | DVSS | 1 | | | |
| | | N/A | 0 | 1 | 1 | X |
| | | DVSS | 1 | | | |
| P3.5/PM_UCB2CLK | 5 | P3.5 (I/O) | I: 0; O: 1 | 0 | 0 | X |
| | | UCB2CLK | X[3] | 0 | 1 | default |
| | | N/A | 0 | 1 | 0 | X |
| | | DVSS | 1 | | | |
| | | N/A | 0 | 1 | 1 | X |
| | | DVSS | 1 | | | |

(1) X = don't care
(2) Direction controlled by eUSCI_A2 module.
(3) Direction controlled by eUSCI_B2 module.

### Table 6-64. Port P3 (P3.0 to P3.7) Pin Functions (continued)

| PIN NAME (P3.x) | x | FUNCTION | CONTROL BITS OR SIGNALS[1] | | | |
|---|---|---|---|---|---|---|
| | | | P3DIR.x | P3SEL1.x | P3SEL0.x | P3MAPx |
| P3.6/PM_UCB2SIMO/PM_UCB2SDA | 6 | P3.6 (I/O) | I: 0; O: 1 | 0 | 0 | X |
| | | UCB2SIMO/UCB2SDA | X[3] | 0 | 1 | default |
| | | N/A | 0 | 1 | 0 | X |
| | | DVSS | 1 | | | |
| | | N/A | 0 | 1 | 1 | X |
| | | DVSS | 1 | | | |
| P3.7/PM_UCB2SOMI/PM_UCB2SCL | 7 | P3.7 (I/O) | I: 0; O: 1 | 0 | 0 | X |
| | | UCB2SOMI/UCB2SCL | X[3] | 0 | 1 | default |
| | | N/A | 0 | 1 | 0 | X |
| | | DVSS | 1 | | | |
| | | N/A | 0 | 1 | 1 | X |
| | | DVSS | 1 | | | |


Copyright © 2015–2016, Texas Instruments Incorporated

### 6.12.4 Port P9 (P9.4 to P9.7) Input/Output With Schmitt Trigger

Figure 6-7 shows the port diagram. Table 6-65 summarizes the selection of the pin functions.

**Table 6-65. Port P9 (P9.4 to P9.7) Pin Functions**

| PIN NAME (P9.x) | x | FUNCTION | CONTROL BITS OR SIGNALS(1) | | |
|---|---|---|---|---|---|
| | | | P9DIR.x | P9SEL1.x | P9SEL0.x |
| P9.4/UCA3STE(2) | 4 | P9.4 (I/O) | I: 0; O: 1 | 0 | 0 |
| | | UCA3STE | X(3) | 0 | 1 |
| | | N/A | 0 | 1 | 0 |
| | | DVSS | 1 | | |
| | | N/A | 0 | 1 | 1 |
| | | DVSS | 1 | | |
| P9.5/UCA3CLK(2) | 5 | P9.5 (I/O) | I: 0; O: 1 | 0 | 0 |
| | | UCA3CLK | X(3) | 0 | 1 |
| | | N/A | 0 | 1 | 0 |
| | | DVSS | 1 | | |
| | | N/A | 0 | 1 | 1 |
| | | DVSS | 1 | | |
| P9.6/UCA3RXD/UCA3SOMI(2) | 6 | P9.6 (I/O) | I: 0; O: 1 | 0 | 0 |
| | | UCA3RXD/UCA3SOMI | X(3) | 0 | 1 |
| | | N/A | 0 | 1 | 0 |
| | | DVSS | 1 | | |
| | | N/A | 0 | 1 | 1 |
| | | DVSS | 1 | | |
| P9.7/UCA3TXD/UCA3SIMO(2) | 7 | P9.7 (I/O) | I: 0; O: 1 | 0 | 0 |
| | | UCA3TXD/UCA3SIMO | X(3) | 0 | 1 |
| | | N/A | 0 | 1 | 0 |
| | | DVSS | 1 | | |
| | | N/A | 0 | 1 | 1 |
| | | DVSS | 1 | | |

(1) X = don't care
(2) Not available on 80ZXH and 64RGC packages.
(3) Direction controlled by eUSCI_A3 module.

### 6.12.5 Port P10 (P10.0 to P10.3) Input/Output With Schmitt Trigger

Figure 6-7 shows the port diagram. Table 6-66 summarizes the selection of the pin functions.

**Table 6-66. Port P10 (P10.0 to P10.3) Pin Functions**

| PIN NAME (P10.x) | x | FUNCTION | CONTROL BITS OR SIGNALS(1) | | |
|---|---|---|---|---|---|
| | | | P10DIR.x | P10SEL1.x | P10SEL0.x |
| P10.0/UCB3STE(2) | 0 | P10.0 (I/O) | I: 0; O: 1 | 0 | 0 |
| | | UCB3STE | X(3) | 0 | 1 |
| | | N/A | 0 | 1 | 0 |
| | | DVSS | 1 | | |
| | | N/A | 0 | 1 | 1 |
| | | DVSS | 1 | | |
| P10.1/UCB3CLK(2) | 1 | P10.1 (I/O) | I: 0; O: 1 | 0 | 0 |
| | | UCB3CLK | X(3) | 0 | 1 |
| | | N/A | 0 | 1 | 0 |
| | | DVSS | 1 | | |
| | | N/A | 0 | 1 | 1 |
| | | DVSS | 1 | | |
| P10.2/UCB3SIMO/UCB3SDA(2) | 2 | P10.2 (I/O) | I: 0; O: 1 | 0 | 0 |
| | | UCB3SIMO/UCB3SDA | X(3) | 0 | 1 |
| | | N/A | 0 | 1 | 0 |
| | | DVSS | 1 | | |
| | | N/A | 0 | 1 | 1 |
| | | DVSS | 1 | | |
| P10.3/UCB3SOMI/UCB3SCL(2) | 3 | P10.3 (I/O) | I: 0; O: 1 | 0 | 0 |
| | | UCB3SOMI/UCB3SCL | X(3) | 0 | 1 |
| | | N/A | 0 | 1 | 0 |
| | | DVSS | 1 | | |
| | | N/A | 0 | 1 | 1 |
| | | DVSS | 1 | | |

(1) X = don't care
(2) Not available on 80ZXH and 64RGC packages.
(3) Direction controlled by eUSCI_B3 module.


Copyright © 2015–2016, Texas Instruments Incorporated

### 6.12.6 Port P2 (P2.4 to P2.7) Input/Output With Schmitt Trigger

Figure 6-8 shows the port diagram. Table 6-67 summarizes the selection of the pin functions.

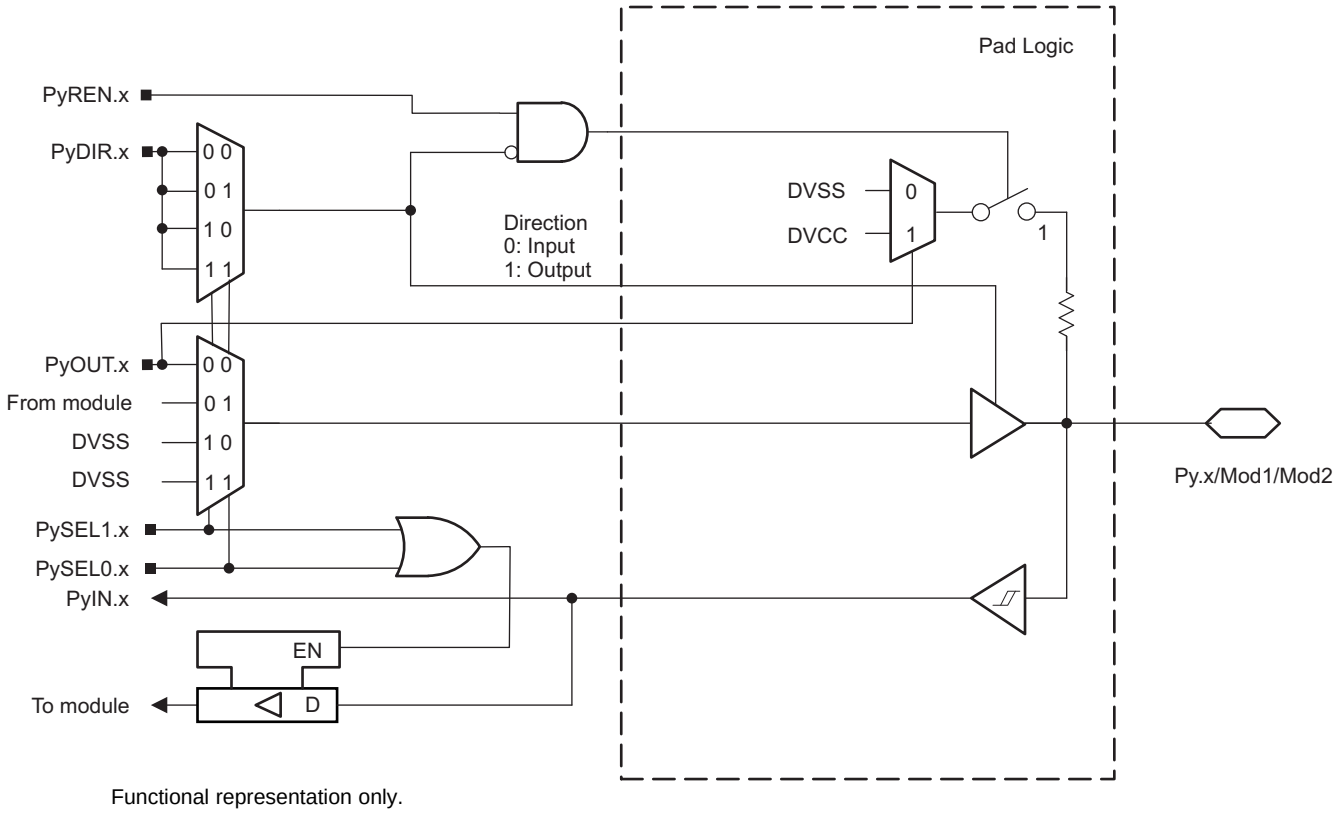


**Figure 6-8. Py.x/Mod1/Mod2 Pin Diagram**

### Table 6-67. Port P2 (P2.4 to P2.7) Pin Functions

| PIN NAME (P2.x) | x | FUNCTION | CONTROL BITS OR SIGNALS[1] | | | |
|---|---|---|---|---|---|---|
| | | | P2DIR.x | P2SEL1.x | P2SEL0.x | P2MAPx |
| P2.4/PM_TA0.1[2] | 4 | P2.4 (I/O) | I: 0; O: 1 | 0 | 0 | X |
| | | TA0.CCI1A | 0 | 0 | 1 | default |
| | | TA0.1 | 1 | | | |
| | | N/A | 0 | 1 | 0 | X |
| | | DVSS | 1 | | | |
| | | N/A | 0 | 1 | 1 | X |
| | | DVSS | 1 | | | |
| P2.5/PM_TA0.2[2] | 5 | P2.5 (I/O) | I: 0; O: 1 | 0 | 0 | X |
| | | TA0.CCI2A | 0 | 0 | 1 | default |
| | | TA0.2 | 1 | | | |
| | | N/A | 0 | 1 | 0 | X |
| | | DVSS | 1 | | | |
| | | N/A | 0 | 1 | 1 | X |
| | | DVSS | 1 | | | |
| P2.6/PM_TA0.3[2] | 6 | P2.6 (I/O) | I: 0; O: 1 | 0 | 0 | X |
| | | TA0.CCI3A | 0 | 0 | 1 | default |
| | | TA0.3 | 1 | | | |
| | | N/A | 0 | 1 | 0 | X |
| | | DVSS | 1 | | | |
| | | N/A | 0 | 1 | 1 | X |
| | | DVSS | 1 | | | |
| P2.7/PM_TA0.4[2] | 7 | P2.7 (I/O) | I: 0; O: 1 | 0 | 0 | X |
| | | TA0.CCI4A | 0 | 0 | 1 | default |
| | | TA0.4 | 1 | | | |
| | | N/A | 0 | 1 | 0 | X |
| | | DVSS | 1 | | | |
| | | N/A | 0 | 1 | 1 | X |
| | | DVSS | 1 | | | |

(1) X = don't care
(2) Not available on the 64-pin RGC package.


Copyright © 2015–2016, Texas Instruments Incorporated

### 6.12.7 Port P7 (P7.0 to P7.3) Input/Output With Schmitt Trigger

Figure 6-8 shows the port diagram. Table 6-68 summarizes the selection of the pin functions.

**Table 6-68. Port P7 (P7.0 to P7.3) Pin Functions**

| PIN NAME (P7.x) | x | FUNCTION | CONTROL BITS OR SIGNALS(1) | | | |
|---|---|---|---|---|---|---|
| | | | P7DIR.x | P7SEL1.x | P7SEL0.x | P7MAPx |
| P7.0/PM_SMCLK/ PM_DMAE0 | 0 | P7.0 (I/O) | I: 0; O: 1 | 0 | 0 | X |
| | | DMAE0 | 0 | 0 | 1 | default |
| | | SMCLK | 1 | | | |
| | | N/A | 0 | 1 | 0 | X |
| | | DVSS | 1 | | | |
| | | N/A | 0 | 1 | 1 | X |
| | | DVSS | 1 | | | |
| P7.1/PM_C0OUT/ PM_TA0CLK | 1 | P7.1 (I/O) | I: 0; O: 1 | 0 | 0 | X |
| | | TA0CLK | 0 | 0 | 1 | default |
| | | C0OUT | 1 | | | |
| | | N/A | 0 | 1 | 0 | X |
| | | DVSS | 1 | | | |
| | | N/A | 0 | 1 | 1 | X |
| | | DVSS | 1 | | | |
| P7.2/PM_C1OUT/ PM_TA1CLK | 2 | P7.2 (I/O) | I: 0; O: 1 | 0 | 0 | X |
| | | TA1CLK | 0 | 0 | 1 | default |
| | | C1OUT | 1 | | | |
| | | N/A | 0 | 1 | 0 | X |
| | | DVSS | 1 | | | |
| | | N/A | 0 | 1 | 1 | X |
| | | DVSS | 1 | | | |
| P7.3/PM_TA0.0 | 3 | P7.3 (I/O) | I: 0; O: 1 | 0 | 0 | X |
| | | TA0.CCI0A | 0 | 0 | 1 | default |
| | | TA0.0 | 1 | | | |
| | | N/A | 0 | 1 | 0 | X |
| | | DVSS | 1 | | | |
| | | N/A | 0 | 1 | 1 | X |
| | | DVSS | 1 | | | |

(1) X = don't care

### 6.12.8 Port P9 (P9.2 and P9.3) Input/Output With Schmitt Trigger

Figure 6-8 shows the port diagram. Table 6-69 summarizes the selection of the pin functions.

**Table 6-69. Port P9 (P9.2 and P9.3) Pin Functions**

| PIN NAME (P9.x) | x | FUNCTION | CONTROL BITS OR SIGNALS | | |
|---|---|---|---|---|---|
| | | | P9DIR.x | P9SEL1.x | P9SEL0.x |
| P9.2/TA3.3 (1) | 2 | P9.2 (I/O) | I: 0; O: 1 | 0 | 0 |
| | | TA3.CCI3A | 0 | 0 | 1 |
| | | TA3.3 | 1 | | |
| | | N/A | 0 | 1 | 0 |
| | | DVSS | 1 | | |
| | | N/A | 0 | 1 | 1 |
| | | DVSS | 1 | | |
| P9.3/TA3.4 (1) | 3 | P9.3 (I/O) | I: 0; O: 1 | 0 | 0 |
| | | TA3.CCI4A | 0 | 0 | 1 |
| | | TA3.4 | 1 | | |
| | | N/A | 0 | 1 | 0 |
| | | DVSS | 1 | | |
| | | N/A | 0 | 1 | 1 |
| | | DVSS | 1 | | |

(1) Not available on 80ZXH and 64RGC packages.


Copyright © 2015–2016, Texas Instruments Incorporated

### 6.12.9 Port P4 (P4.0 to P4.7) Input/Output With Schmitt Trigger

Figure 6-9 shows the port diagram. Table 6-70 summarizes the selection of the pin functions.

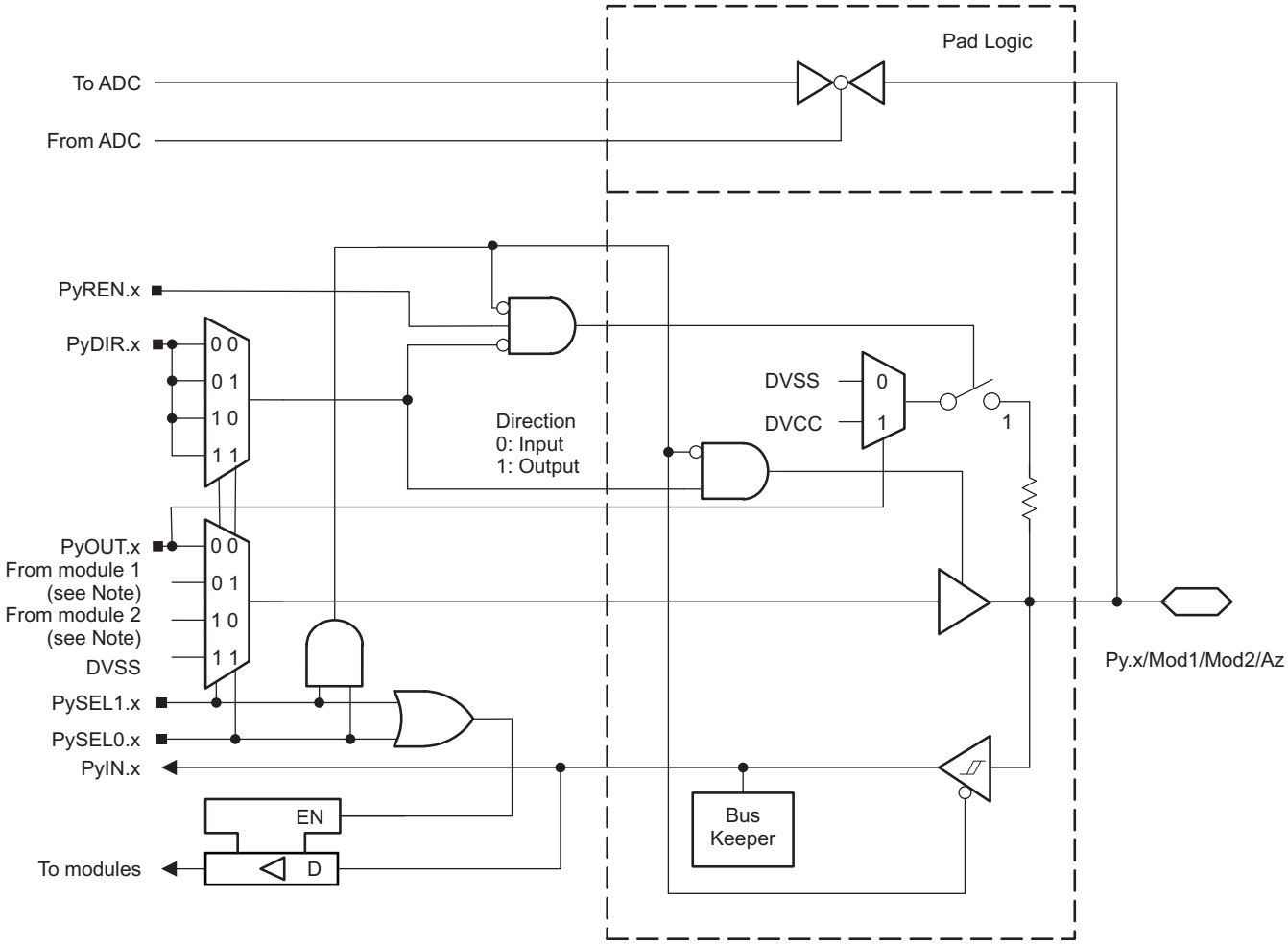


Note: Output is DVSS if module 1 or module 2 function is not available. See the pin function tables.
Functional representation only.

**Figure 6-9. Py.x/Mod1/Mod2/Az Pin Diagram**

### Table 6-70. Port P4 (P4.0 to P4.7) Pin Functions

| PIN NAME (P4.x) | x | FUNCTION | CONTROL BITS OR SIGNALS[1] | | |
|---|---|---|---|---|---|
| | | | P4DIR.x | P4SEL1.x | P4SEL0.x |
| P4.0/A13[2] | 0 | P4.0 (I/O) | I: 0; O: 1 | 0 | 0 |
| | | N/A | 0 | 0 | 1 |
| | | DVSS | 1 | | |
| | | N/A | 0 | 1 | 0 |
| | | DVSS | 1 | | |
| | | A13[3] | X | 1 | 1 |
| P4.1/A12[2] | 1 | P4.1 (I/O) | I: 0; O: 1 | 0 | 0 |
| | | N/A | 0 | 0 | 1 |
| | | DVSS | 1 | | |
| | | N/A | 0 | 1 | 0 |
| | | DVSS | 1 | | |
| | | A12[3] | X | 1 | 1 |
| P4.2/ACLK/TA2CLK/A11 | 2 | P4.2 (I/O) | I: 0; O: 1 | 0 | 0 |
| | | N/A | 0 | 0 | 1 |
| | | ACLK | 1 | | |
| | | TA2CLK | 0 | 1 | 0 |
| | | DVSS | 1 | | |
| | | A11[3] | X | 1 | 1 |
| P4.3/MCLK/RTCCLK/A10 | 3 | P4.3 (I/O) | I: 0; O: 1 | 0 | 0 |
| | | N/A | 0 | 0 | 1 |
| | | MCLK | 1 | | |
| | | N/A | 0 | 1 | 0 |
| | | RTCCLK | 1 | | |
| | | A10[3] | X | 1 | 1 |
| P4.4/HSMCLK/SVMHOUT/A9 | 4 | P4.4 (I/O) | I: 0; O: 1 | 0 | 0 |
| | | N/A | 0 | 0 | 1 |
| | | HSMCLK | 1 | | |
| | | N/A | 0 | 1 | 0 |
| | | SVMHOUT | 1 | | |
| | | A9[3] | X | 1 | 1 |
| P4.5/A8 | 5 | P4.5 (I/O) | I: 0; O: 1 | 0 | 0 |
| | | N/A | 0 | 0 | 1 |
| | | DVSS | 1 | | |
| | | N/A | 0 | 1 | 0 |
| | | DVSS | 1 | | |
| | | A8[3] | X | 1 | 1 |
| P4.6/A7 | 6 | P4.6 (I/O) | I: 0; O: 1 | 0 | 0 |
| | | N/A | 0 | 0 | 1 |
| | | DVSS | 1 | | |
| | | N/A | 0 | 1 | 0 |
| | | DVSS | 1 | | |
| | | A7[3] | X | 1 | 1 |

(1) X = don't care
(2) Not available on the 64-pin RGC package.
(3) Setting P4SEL1.x and P4SEL0.x disables the output driver and the input Schmitt trigger to prevent parasitic cross currents when applying analog signals.


Copyright © 2015–2016, Texas Instruments Incorporated

**Table 6-70. Port P4 (P4.0 to P4.7) Pin Functions (continued)**

| PIN NAME (P4.x) | x | FUNCTION | CONTROL BITS OR SIGNALS[1] | | |
|---|---|---|---|---|---|
| | | | P4DIR.x | P4SEL1.x | P4SEL0.x |
| P4.7/A6 | 7 | P4.7 (I/O) | I: 0; O: 1 | 0 | 0 |
| | | N/A | 0 | 0 | 1 |
| | | DVSS | 1 | | |
| | | N/A | 0 | 1 | 0 |
| | | DVSS | 1 | | |
| | | A6[3] | X | 1 | 1 |

### 6.12.10 Port P5 (P5.0 to P5.5) Input/Output With Schmitt Trigger

Figure 6-9 shows the port diagram. Table 6-71 summarizes the selection of the pin functions.

**Table 6-71. Port P5 (P5.0 to P5.5) Pin Functions**

| PIN NAME (P5.x) | x | FUNCTION | CONTROL BITS OR SIGNALS[1] | | |
|---|---|---|---|---|---|
| | | | P5DIR.x | P5SEL1.x | P5SEL0.x |
| P5.0/A5 | 0 | P5.0 (I/O) | I: 0; O: 1 | 0 | 0 |
| | | N/A | 0 | 0 | 1 |
| | | DVSS | 1 | | |
| | | N/A | 0 | 1 | 0 |
| | | DVSS | 1 | | |
| | | A5[2] | X | 1 | 1 |
| P5.1/A4 | 1 | P5.1 (I/O) | I: 0; O: 1 | 0 | 0 |
| | | N/A | 0 | 0 | 1 |
| | | DVSS | 1 | | |
| | | N/A | 0 | 1 | 0 |
| | | DVSS | 1 | | |
| | | A4[2] | X | 1 | 1 |
| P5.2/A3 | 2 | P5.2 (I/O) | I: 0; O: 1 | 0 | 0 |
| | | N/A | 0 | 0 | 1 |
| | | DVSS | 1 | | |
| | | N/A | 0 | 1 | 0 |
| | | DVSS | 1 | | |
| | | A3[2] | X | 1 | 1 |
| P5.3/A2 | 3 | P5.3 (I/O) | I: 0; O: 1 | 0 | 0 |
| | | N/A | 0 | 0 | 1 |
| | | DVSS | 1 | | |
| | | N/A | 0 | 1 | 0 |
| | | DVSS | 1 | | |
| | | A2[2] | X | 1 | 1 |
| P5.4/A1 | 4 | P5.4 (I/O) | I: 0; O: 1 | 0 | 0 |
| | | N/A | 0 | 0 | 1 |
| | | DVSS | 1 | | |
| | | N/A | 0 | 1 | 0 |
| | | DVSS | 1 | | |
| | | A1[2] | X | 1 | 1 |
| P5.5/A0 | 5 | P5.5 (I/O) | I: 0; O: 1 | 0 | 0 |
| | | N/A | 0 | 0 | 1 |
| | | DVSS | 1 | | |
| | | N/A | 0 | 1 | 0 |
| | | DVSS | 1 | | |
| | | A0[2] | X | 1 | 1 |

(1) X = don't care
(2) Setting P5SEL1.x and P5SEL0.x disables the output driver and the input Schmitt trigger to prevent parasitic cross currents when applying analog signals.


Copyright © 2015–2016, Texas Instruments Incorporated

### 6.12.11 Port P6 (P6.0 and P6.1) Input/Output With Schmitt Trigger

Figure 6-9 shows the port diagram. Table 6-72 summarizes the selection of the pin functions.

**Table 6-72. Port P6 (P6.0 and P6.1) Pin Functions**

| PIN NAME (P6.x) | x | FUNCTION | CONTROL BITS OR SIGNALS[1] | | |
|---|---|---|---|---|---|
| | | | P6DIR.x | P6SEL1.x | P6SEL0.x |
| P6.0/A15[2] | 0 | P6.0 (I/O) | I: 0; O: 1 | 0 | 0 |
| | | N/A | 0 | 0 | 1 |
| | | DVSS | 1 | | |
| | | N/A | 0 | 1 | 0 |
| | | DVSS | 1 | | |
| | | A15[3] | X | 1 | 1 |
| P6.1/A14[2] | 1 | P6.1 (I/O) | I: 0; O: 1 | 0 | 0 |
| | | N/A | 0 | 0 | 1 |
| | | DVSS | 1 | | |
| | | N/A | 0 | 1 | 0 |
| | | DVSS | 1 | | |
| | | A14[3] | X | 1 | 1 |

(1) X = don't care
(2) Not available on the 64-pin RGC package.
(3) Setting P6SEL1.x and P6SEL0.x disables the output driver and the input Schmitt trigger to prevent parasitic cross currents when applying analog signals.

### 6.12.12 Port P8 (P8.2 to P8.7) Input/Output With Schmitt Trigger

Figure 6-9 shows the port diagram. Table 6-73 summarizes the selection of the pin functions.

**Table 6-73. Port P8 (P8.2 to P8.7) Pin Functions**

| PIN NAME (P8.x) | x | FUNCTION | CONTROL BITS OR SIGNALS[1] | | |
|---|---|---|---|---|---|
| | | | P8DIR.x | P8SEL1.x | P8SEL0.x |
| P8.2/TA3.2/A23[2] | 2 | P8.2 (I/O) | I: 0; O: 1 | 0 | 0 |
| | | TA3.CCI2A | 0 | 0 | 1 |
| | | TA3.2 | 1 | | |
| | | N/A | 0 | 1 | 0 |
| | | DVSS | 1 | | |
| | | A23[3] | X | 1 | 1 |
| P8.3/TA3CLK/A22[2] | 3 | P8.3 (I/O) | I: 0; O: 1 | 0 | 0 |
| | | TA3CLK | 0 | 0 | 1 |
| | | DVSS | 1 | | |
| | | N/A | 0 | 1 | 0 |
| | | DVSS | 1 | | |
| | | A22[3] | X | 1 | 1 |
| P8.4/A21[2] | 4 | P8.4 (I/O) | I: 0; O: 1 | 0 | 0 |
| | | N/A | 0 | 0 | 1 |
| | | DVSS | 1 | | |
| | | N/A | 0 | 1 | 0 |
| | | DVSS | 1 | | |
| | | A21[3] | X | 1 | 1 |
| P8.5/A20[2] | 5 | P8.5 (I/O) | I: 0; O: 1 | 0 | 0 |
| | | N/A | 0 | 0 | 1 |
| | | DVSS | 1 | | |
| | | N/A | 0 | 1 | 0 |
| | | DVSS | 1 | | |
| | | A20[3] | X | 1 | 1 |
| P8.6/A19[2] | 6 | P8.6 (I/O) | I: 0; O: 1 | 0 | 0 |
| | | N/A | 0 | 0 | 1 |
| | | DVSS | 1 | | |
| | | N/A | 0 | 1 | 0 |
| | | DVSS | 1 | | |
| | | A19[3] | X | 1 | 1 |
| P8.7/A18[2] | 7 | P8.7 (I/O) | I: 0; O: 1 | 0 | 0 |
| | | N/A | 0 | 0 | 1 |
| | | DVSS | 1 | | |
| | | N/A | 0 | 1 | 0 |
| | | DVSS | 1 | | |
| | | A18[3] | X | 1 | 1 |

(1) X = don't care
(2) Not available on 80ZXH and 64RGC packages.
(3) Setting P8SEL1.x and P8SEL0.x disables the output driver and the input Schmitt trigger to prevent parasitic cross currents when applying analog signals.


Copyright © 2015–2016, Texas Instruments Incorporated

### 6.12.13 Port P9 (P9.0 and P9.1) Input/Output With Schmitt Trigger

Figure 6-9 shows the port diagram. Table 6-74 summarizes the selection of the pin functions.

**Table 6-74. Port P9 (P9.0 and P9.1) Pin Functions**

| PIN NAME (P9.x) | x | FUNCTION | CONTROL BITS OR SIGNALS[1] | | |
|---|---|---|---|---|---|
| | | | P9DIR.x | P9SEL1.x | P9SEL0.x |
| P9.0/A17[2] | 0 | P9.0 (I/O) | I: 0; O: 1 | 0 | 0 |
| | | N/A | 0 | 0 | 1 |
| | | DVSS | 1 | | |
| | | N/A | 0 | 1 | 0 |
| | | DVSS | 1 | | |
| | | A17[3] | X | 1 | 1 |
| P9.1/A16[2] | 1 | P9.1 (I/O) | I: 0; O: 1 | 0 | 0 |
| | | N/A | 0 | 0 | 1 |
| | | DVSS | 1 | | |
| | | N/A | 0 | 1 | 0 |
| | | DVSS | 1 | | |
| | | A16[3] | X | 1 | 1 |

(1) X = don't care
(2) Not available on 80ZXH and 64RGC packages.
(3) Setting P9SEL1.x and P9SEL0.x disables the output driver and the input Schmitt trigger to prevent parasitic cross currents when applying analog signals.

### 6.12.14 Port P5 (P5.6 and P5.7) Input/Output With Schmitt Trigger

Figure 6-10 shows the port diagram. Table 6-75 summarizes the selection of the pin functions.

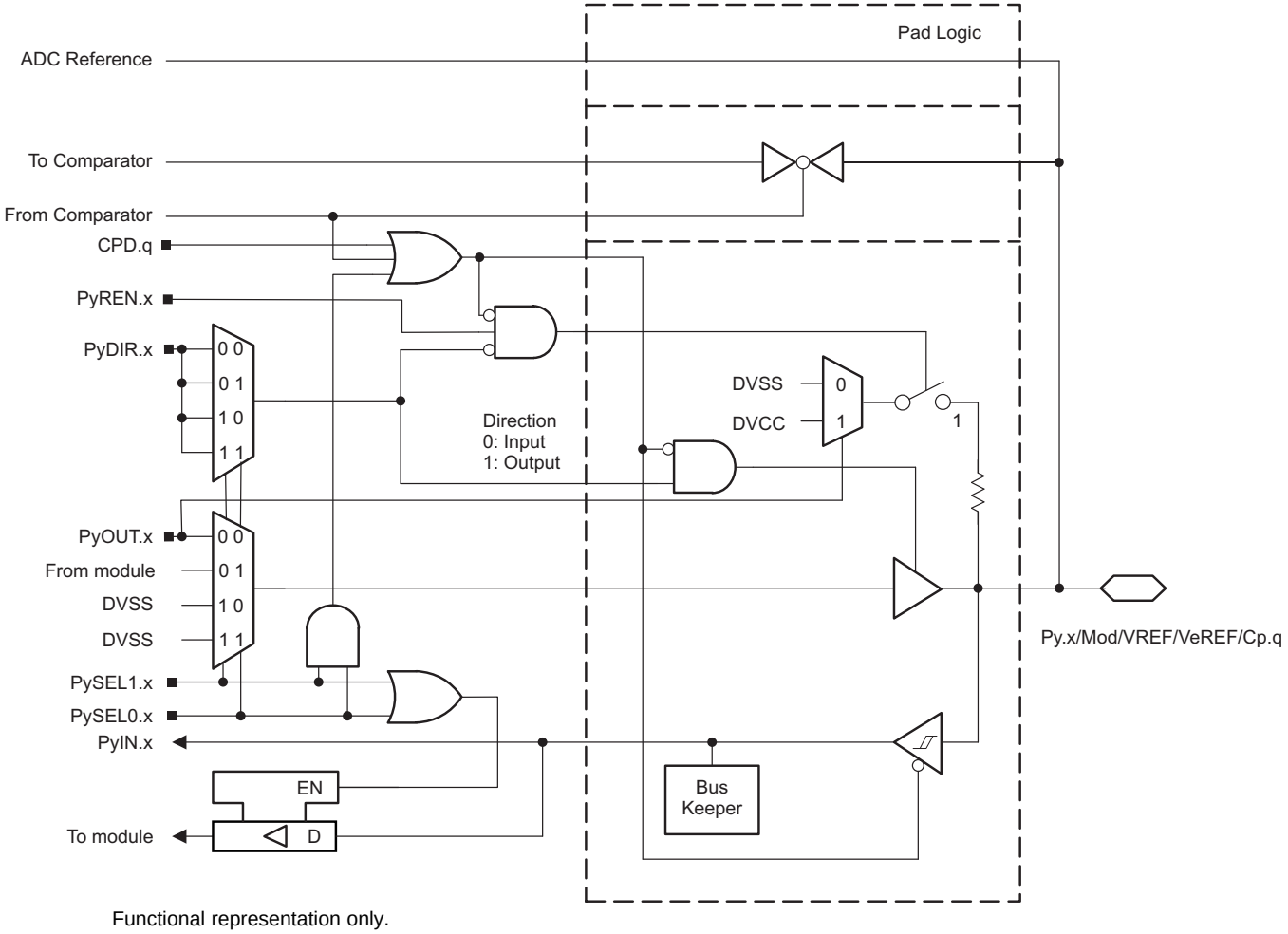


**Figure 6-10. Py.x/Mod/VREF/VeREF/Cp.q Pin Diagram**


Copyright © 2015–2016, Texas Instruments Incorporated

### Table 6-75. Port P5 (P5.6 and P5.7) Pin Functions

| PIN NAME (P5.x) | x | FUNCTION | CONTROL BITS OR SIGNALS[1] | | |
|---|---|---|---|---|---|
| | | | P5DIR.x | P5SEL1.x | P5SEL0.x |
| P5.6/TA2.1/VREF+/VeREF+/C1.7 | 6 | P5.6 (I/O) | I: 0; O: 1 | 0 | 0 |
| | | TA2.CCI1A | 0 | 0 | 1 |
| | | TA2.1 | 1 | | |
| | | N/A | 0 | 1 | 0 |
| | | DVSS | 1 | | |
| | | VREF+, VeREF+, C1.7[2][3] | X | 1 | 1 |
| P5.7/TA2.2/VREF-/VeREF-/C1.6 | 7 | P5.7 (I/O) | I: 0; O: 1 | 0 | 0 |
| | | TA2.CCI2A | 0 | 0 | 1 |
| | | TA2.2 | 1 | | |
| | | N/A | 0 | 1 | 0 |
| | | DVSS | 1 | | |
| | | VREF-, VeREF-, C1.6[2][3] | X | 1 | 1 |

(1) X = don't care
(2) Setting P5SEL1.x and P5SEL0.x disables the output driver and the input Schmitt trigger to prevent parasitic cross currents when applying analog signals.
(3) Setting the CEPD.q bit of the comparator disables the output driver and the input Schmitt trigger to prevent parasitic cross currents when applying analog signals. Selecting the C1.q input pin to the comparator multiplexer with the CEIPSEL or CEIMSEL bits automatically disables the output driver and input buffer for that pin, regardless of the state of the associated CEPD.q bit.

Copyright © 2015–2016, Texas Instruments Incorporated

### 6.12.15 Port P6 (P6.2 to P6.5) Input/Output With Schmitt Trigger

Figure 6-11 shows the port diagram. Table 6-76 summarizes the selection of the pin functions.

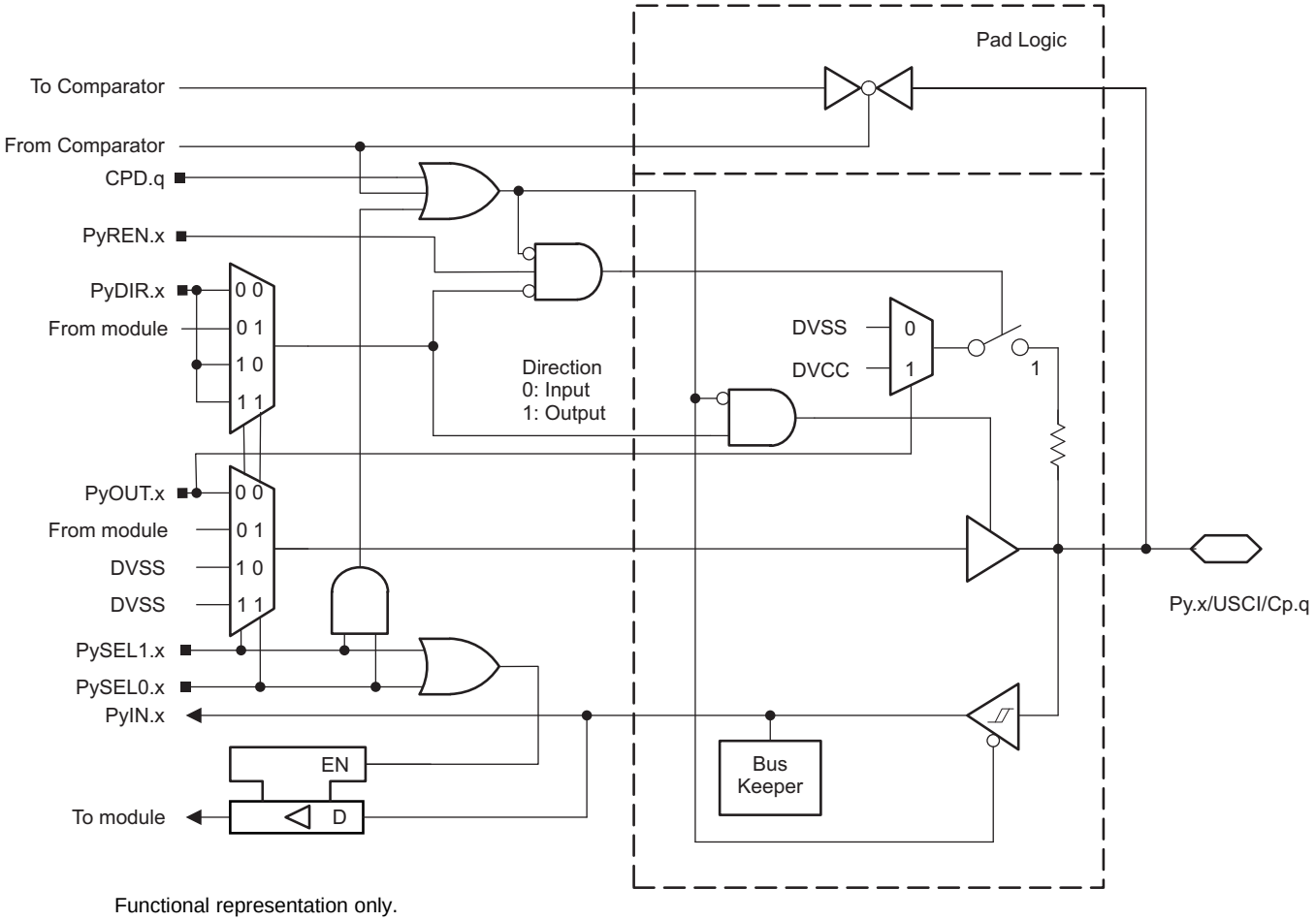


**Figure 6-11. Py.x/USCI/Cp.q Pin Diagram**


Copyright © 2015–2016, Texas Instruments Incorporated

### Table 6-76. Port P6 (P6.2 to P6.5) Pin Functions

| PIN NAME (P6.x) | x | FUNCTION | CONTROL BITS OR SIGNALS[1] | | |
|---|---|---|---|---|---|
| | | | P6DIR.x | P6SEL1.x | P6SEL0.x |
| P6.2/UCB1STE/C1.5[2] | 2 | P6.2 (I/O) | I: 0; O: 1 | 0 | 0 |
| | | UCB1STE | X[3] | 0 | 1 |
| | | N/A | 0 | 1 | 0 |
| | | DVSS | 1 | | |
| | | C1.5[4][5] | X | 1 | 1 |
| P6.3/UCB1CLK/C1.4[2] | 3 | P6.3 (I/O) | I: 0; O: 1 | 0 | 0 |
| | | UCB1CLK | X[3] | 0 | 1 |
| | | N/A | 0 | 1 | 0 |
| | | DVSS | 1 | | |
| | | C1.4[4][5] | X | 1 | 1 |
| P6.4/UCB1SIMO/UCB1SDA/C1.3[2] | 4 | P6.4 (I/O) | I: 0; O: 1 | 0 | 0 |
| | | UCB1SIMO/UCB1SDA | X[3] | 0 | 1 |
| | | N/A | 0 | 1 | 0 |
| | | DVSS | 1 | | |
| | | C1.3[4][5] | X | 1 | 1 |
| P6.5/UCB1SOMI/UCB1SCL/C1.2[2] | 5 | P6.5 (I/O) | I: 0; O: 1 | 0 | 0 |
| | | UCB1SOMI/UCB1SCL | X[3] | 0 | 1 |
| | | N/A | 0 | 1 | 0 |
| | | DVSS | 1 | | |
| | | C1.2[4][5] | X | 1 | 1 |

(1) X = don't care
(2) Not available on the 64-pin RGC package.
(3) Direction controlled by eUSCI_B1 module.
(4) Setting P6SEL1.x and P6SEL0.x disables the output driver and the input Schmitt trigger to prevent parasitic cross currents when applying analog signals.
(5) Setting the CEPD.q bit of the comparator disables the output driver and the input Schmitt trigger to prevent parasitic cross currents when applying analog signals. Selecting the C1.q input pin to the comparator multiplexer with the CEIPSEL or CEIMSEL bits automatically disables the output driver and input buffer for that pin, regardless of the state of the associated CEPD.q bit.

### 6.12.16 Port P6 (P6.6 and P6.7) Input/Output With Schmitt Trigger

Figure 6-12 shows the port diagram. Table 6-77 summarizes the selection of the pin functions.

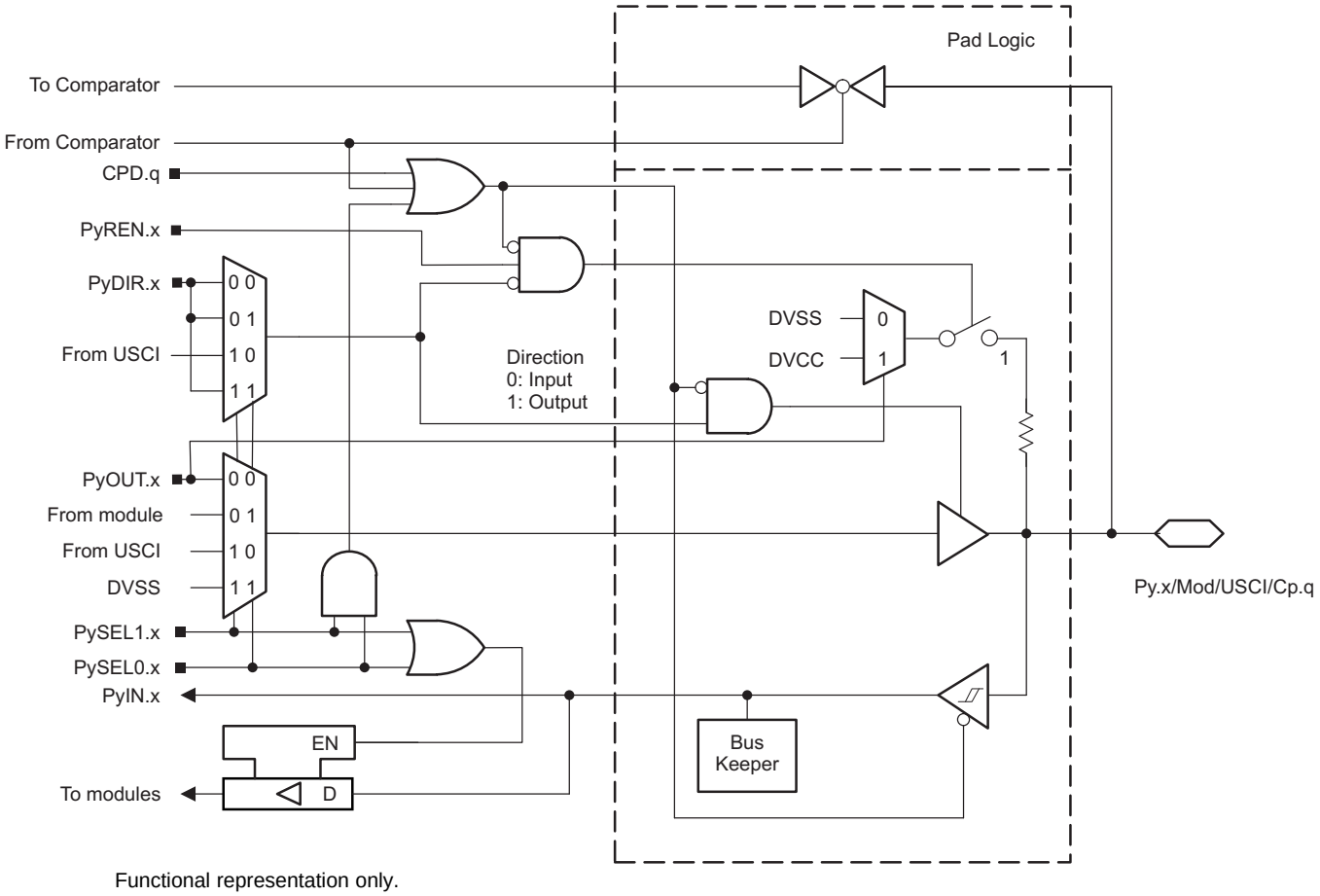


**Figure 6-12. Py.x/Mod/USCI/Cp.q Pin Diagram**


Copyright © 2015–2016, Texas Instruments Incorporated

### Table 6-77. Port P6 (P6.6 and P6.7) Pin Functions

| PIN NAME (P6.x) | x | FUNCTION | CONTROL BITS OR SIGNALS[1] | | |
|---|---|---|---|---|---|
| | | | P6DIR.x | P6SEL1.x | P6SEL0.x |
| P6.6/TA2.3/UCB3SIMO/UCB3SDA/C1.1 | 6 | P6.6 (I/O) | I: 0; O: 1 | 0 | 0 |
| | | TA2.CCI3A | 0 | 0 | 1 |
| | | TA2.3 | 1 | | |
| | | UCB3SIMO/UCB3SDA | X[2] | 1 | 0 |
| | | C1.1[3][4] | X | 1 | 1 |
| P6.7/TA2.4/UCB3SOMI/UCB3SCL/C1.0 | 7 | P6.7 (I/O) | I: 0; O: 1 | 0 | 0 |
| | | TA2.CCI4A | 0 | 0 | 1 |
| | | TA2.4 | 1 | | |
| | | UCB3SOMI/UCB3SCL | X[2] | 1 | 0 |
| | | C1.0[3][4] | X | 1 | 1 |

(1) X = don't care
(2) Direction controlled by eUSCI_B3 module.
(3) Setting P6SEL1.x and P6SEL0.x disables the output driver and the input Schmitt trigger to prevent parasitic cross currents when applying analog signals.
(4) Setting the CEPD.q bit of the comparator disables the output driver and the input Schmitt trigger to prevent parasitic cross currents when applying analog signals. Selecting the C1.q input pin to the comparator multiplexer with the CEIPSEL or CEIMSEL bits automatically disables the output driver and input buffer for that pin, regardless of the state of the associated CEPD.q bit.

### 6.12.17 Port P8 (P8.0 and P8.1) Input/Output With Schmitt Trigger

Figure 6-13 shows the port diagram. Table 6-78 summarizes the selection of the pin functions.

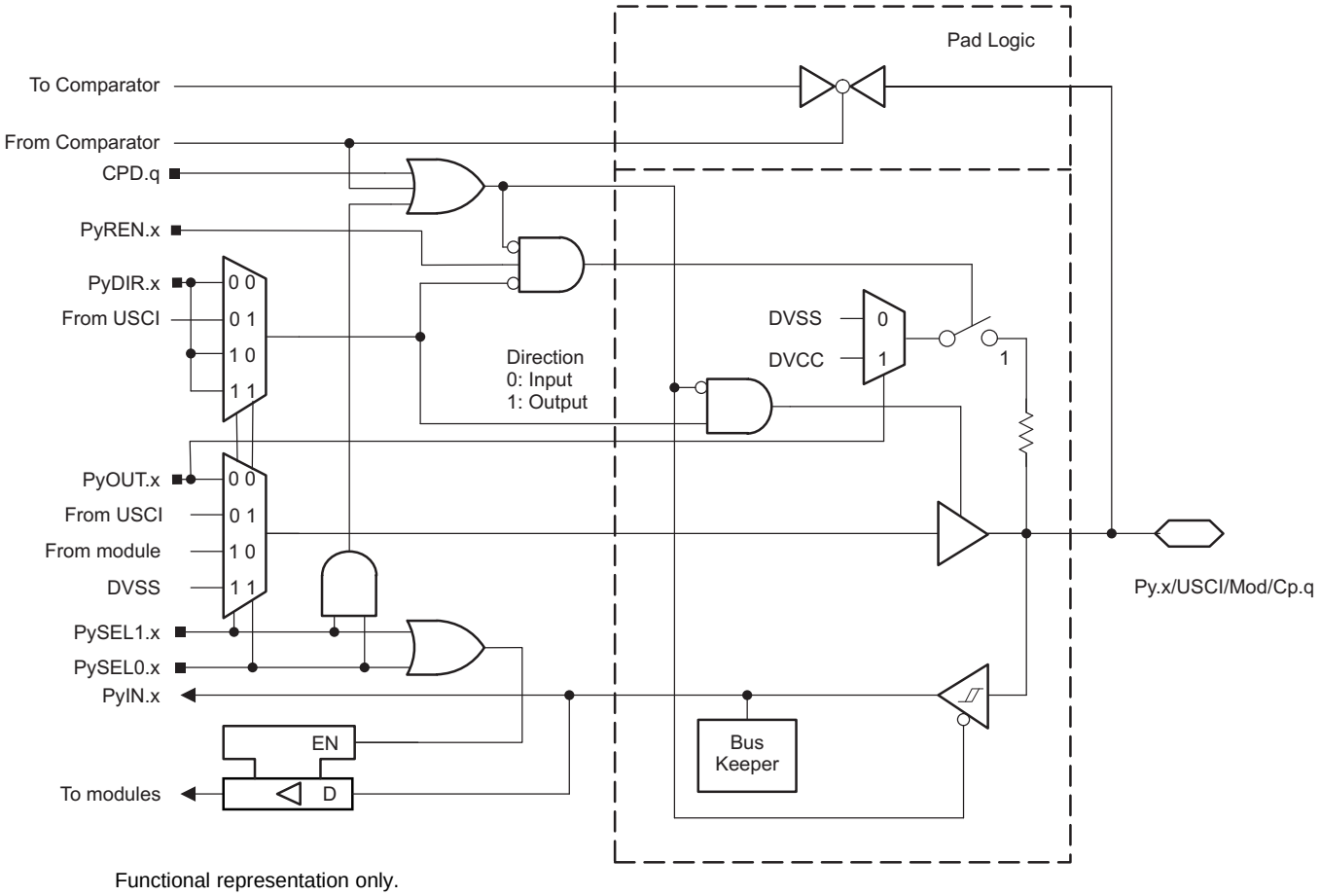


**Figure 6-13. Py.x/USCI/Mod/Cp.q Pin Diagram**


Copyright © 2015–2016, Texas Instruments Incorporated

### Table 6-78. Port P8 (P8.0 and P8.1) Pin Functions

| PIN NAME (P8.x) | x | FUNCTION | CONTROL BITS OR SIGNALS[1] | | |
|---|---|---|---|---|---|
| | | | P8DIR.x | P8SEL1.x | P8SEL0.x |
| P8.0/UCB3STE/TA1.0/C0.1 | 0 | P8.0 (I/O) | I: 0; O: 1 | 0 | 0 |
| | | UCB3STE | X[2] | 0 | 1 |
| | | TA1.CCI0A | 0 | 1 | 0 |
| | | TA1.0 | 1 | | |
| | | C0.1[3][4] | X | 1 | 1 |
| P8.1/UCB3CLK/TA2.0/C0.0 | 1 | P8.1 (I/O) | I: 0; O: 1 | 0 | 0 |
| | | UCB3CLK | X[2] | 0 | 1 |
| | | TA2.CCI0A | 0 | 1 | 0 |
| | | TA2.0 | 1 | | |
| | | C0.0[3][4] | X | 1 | 1 |

(1) X = don't care
(2) Direction controlled by eUSCI_B3 module.
(3) Setting P8SEL1.x and P8SEL0.x disables the output driver and the input Schmitt trigger to prevent parasitic cross currents when applying analog signals.
(4) Setting the CEPD.q bit of the comparator disables the output driver and the input Schmitt trigger to prevent parasitic cross currents when applying analog signals. Selecting the C0.q input pin to the comparator multiplexer with the CEIPSEL or CEIMSEL bits automatically disables the output driver and input buffer for that pin, regardless of the state of the associated CEPD.q bit.

Copyright © 2015–2016, Texas Instruments Incorporated

### 6.12.18 Port P10 (P10.4 and P10.5) Input/Output With Schmitt Trigger

Figure 6-14 shows the port diagram. Table 6-79 summarizes the selection of the pin functions.

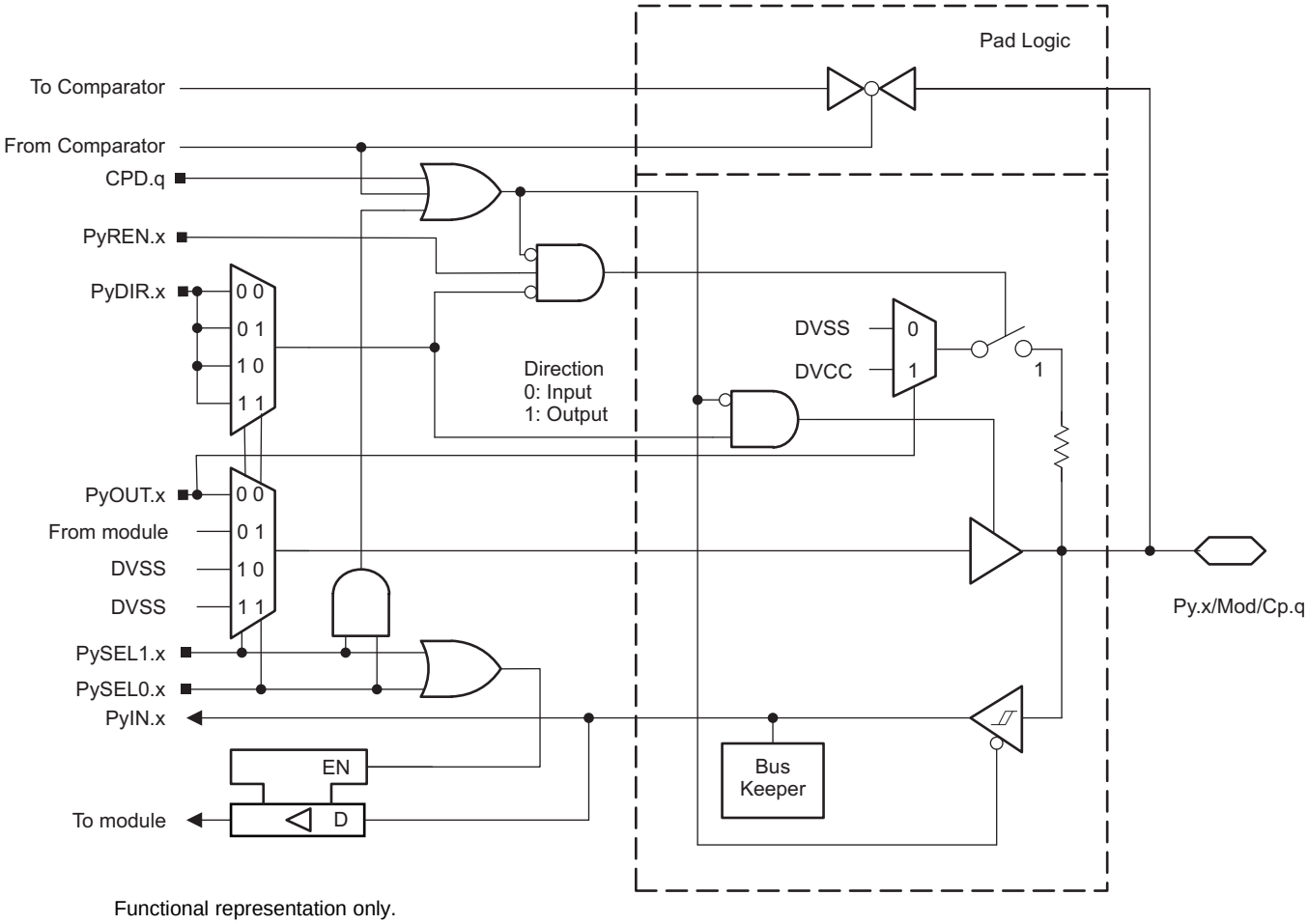


**Figure 6-14. Py.x/Mod/Cp.q Pin Diagram**


Copyright © 2015–2016, Texas Instruments Incorporated

### Table 6-79. Port P10 (P10.4 and P10.5) Pin Functions

| PIN NAME (P10.x) | x | FUNCTION | CONTROL BITS OR SIGNALS[1] | | |
|---|---|---|---|---|---|
| | | | P10DIR.x | P10SEL1.x | P10SEL0.x |
| P10.4/TA3.0/C0.7[2] | 4 | P10.4 (I/O) | I: 0; O: 1 | 0 | 0 |
| | | TA3.CCI0A | 0 | 0 | 1 |
| | | TA3.0 | 1 | | |
| | | N/A | 0 | 1 | 0 |
| | | DVSS | 1 | | |
| | | C0.7[3][4] | X | 1 | 1 |
| P10.5/TA3.1/C0.6[2] | 5 | P10.5 (I/O) | I: 0; O: 1 | 0 | 0 |
| | | TA3.CCI1A | 0 | 0 | 1 |
| | | TA3.1 | 1 | | |
| | | N/A | 0 | 1 | 0 |
| | | DVSS | 1 | | |
| | | C0.6[3][4] | X | 1 | 1 |

(1) X = don't care
(2) Not available on 80ZXH and 64RGC packages.
(3) Setting P10SEL1.x and P10SEL0.x disables the output driver and the input Schmitt trigger to prevent parasitic cross currents when applying analog signals.
(4) Setting the CEPD.q bit of the comparator disables the output driver and the input Schmitt trigger to prevent parasitic cross currents when applying analog signals. Selecting the C0.q input pin to the comparator multiplexer with the CEIPSEL or CEIMSEL bits automatically disables the output driver and input buffer for that pin, regardless of the state of the associated CEPD.q bit.

### 6.12.19 Port P7 (P7.4 to P7.7) Input/Output With Schmitt Trigger

Figure 6-15 shows the port diagram. Table 6-80 summarizes the selection of the pin functions.

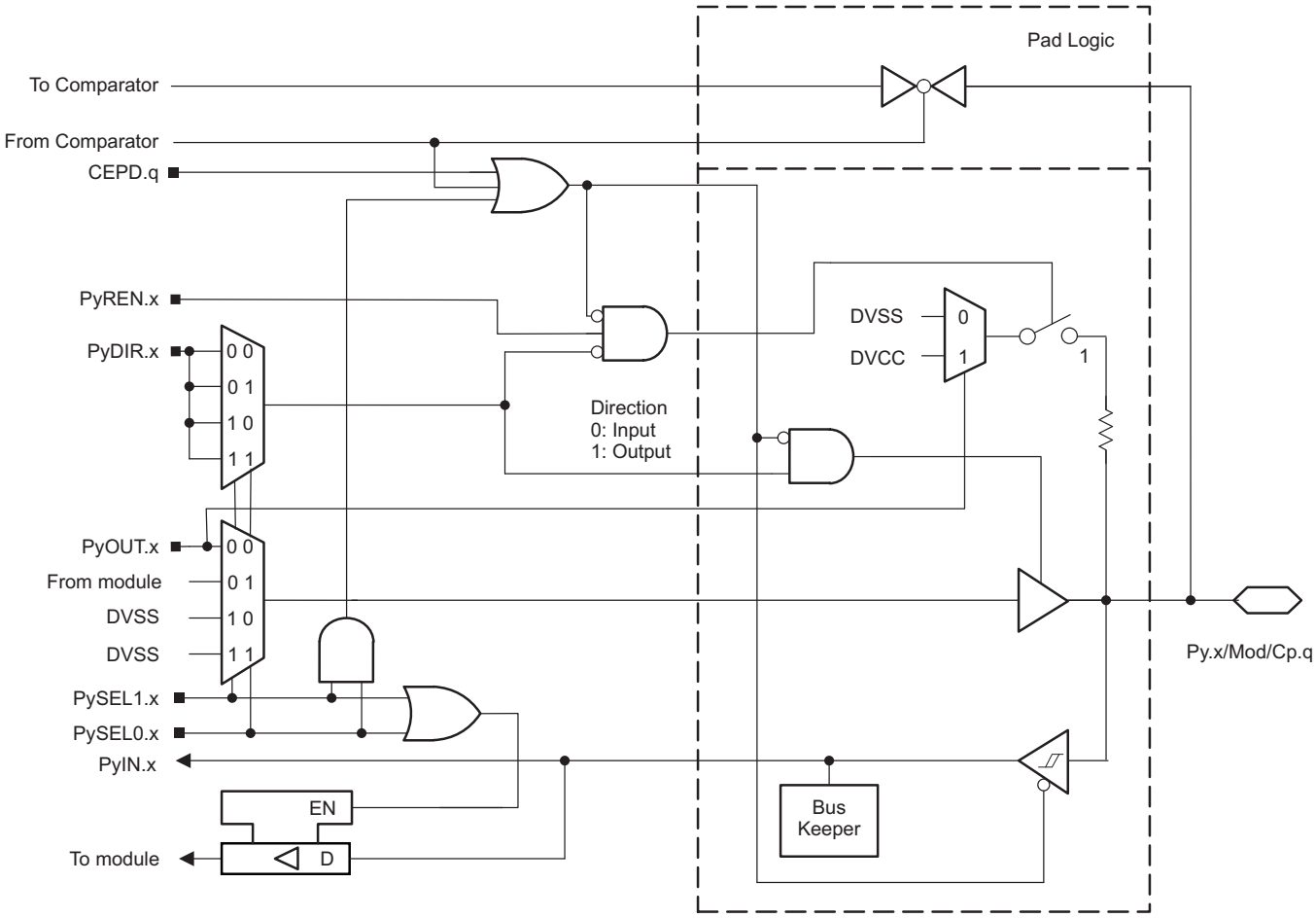


Functional representation only.

**Figure 6-15. Py.x/Mod/Cp.q Pin Diagram**


Copyright © 2015–2016, Texas Instruments Incorporated

### Table 6-80. Port P7 (P7.4 to P7.7) Pin Functions

| PIN NAME (P7.x) | x | FUNCTION | CONTROL BITS OR SIGNALS[1] | | | |
|---|---|---|---|---|---|---|
| | | | P7DIR.x | P7SEL1.x | P7SEL0.x | P7MAPx |
| P7.4/PM_TA1.4/C0.5[2] | 4 | P7.4 (I/O) | I: 0; O: 1 | 0 | 0 | X |
| | | TA1.CCI4A | 0 | 0 | 1 | default |
| | | TA1.4 | 1 | | | |
| | | N/A | 0 | 1 | 0 | X |
| | | DVSS | 1 | | | |
| | | C0.5[3][4] | X | 1 | 1 | X |
| P7.5/PM_TA1.3/C0.4[2] | 5 | P7.5 (I/O) | I: 0; O: 1 | 0 | 0 | X |
| | | TA1.CCI3A | 0 | 0 | 1 | default |
| | | TA1.3 | 1 | | | |
| | | N/A | 0 | 1 | 0 | X |
| | | DVSS | 1 | | | |
| | | C0.4[3][4] | X | 1 | 1 | X |
| P7.6/PM_TA1.2/C0.3[2] | 6 | P7.6 (I/O) | I: 0; O: 1 | 0 | 0 | X |
| | | TA1.CCI2A | 0 | 0 | 1 | default |
| | | TA1.2 | 1 | | | |
| | | N/A | 0 | 1 | 0 | X |
| | | DVSS | 1 | | | |
| | | C0.3[3][4] | X | 1 | 1 | X |
| P7.7/PM_TA1.1/C0.2[2] | 7 | P7.7 (I/O) | I: 0; O: 1 | 0 | 0 | X |
| | | TA1.CCI1A | 0 | 0 | 1 | default |
| | | TA1.1 | 1 | | | |
| | | N/A | 0 | 1 | 0 | X |
| | | DVSS | 1 | | | |
| | | C0.2[3][4] | X | 1 | 1 | X |

(1) X = don't care
(2) Not available on the 64-pin RGC package.
(3) Setting P7SEL1.x and P7SEL0.x disables the output driver and the input Schmitt trigger to prevent parasitic cross currents when applying analog signals.
(4) Setting the CEPD.q bit of the comparator disables the output driver and the input Schmitt trigger to prevent parasitic cross currents when applying analog signals. Selecting the C0.q input pin to the comparator multiplexer with the CEIPSEL or CEIMSEL bits automatically disables the output driver and input buffer for that pin, regardless of the state of the associated CEPD.q bit.

Copyright © 2015–2016, Texas Instruments Incorporated

### 6.12.20 Port PJ (PJ.0 and PJ.1) Input/Output With Schmitt Trigger

Figure 6-16 and Figure 6-17 show the port diagram. Table 6-81 summarizes the selection of the pin functions.

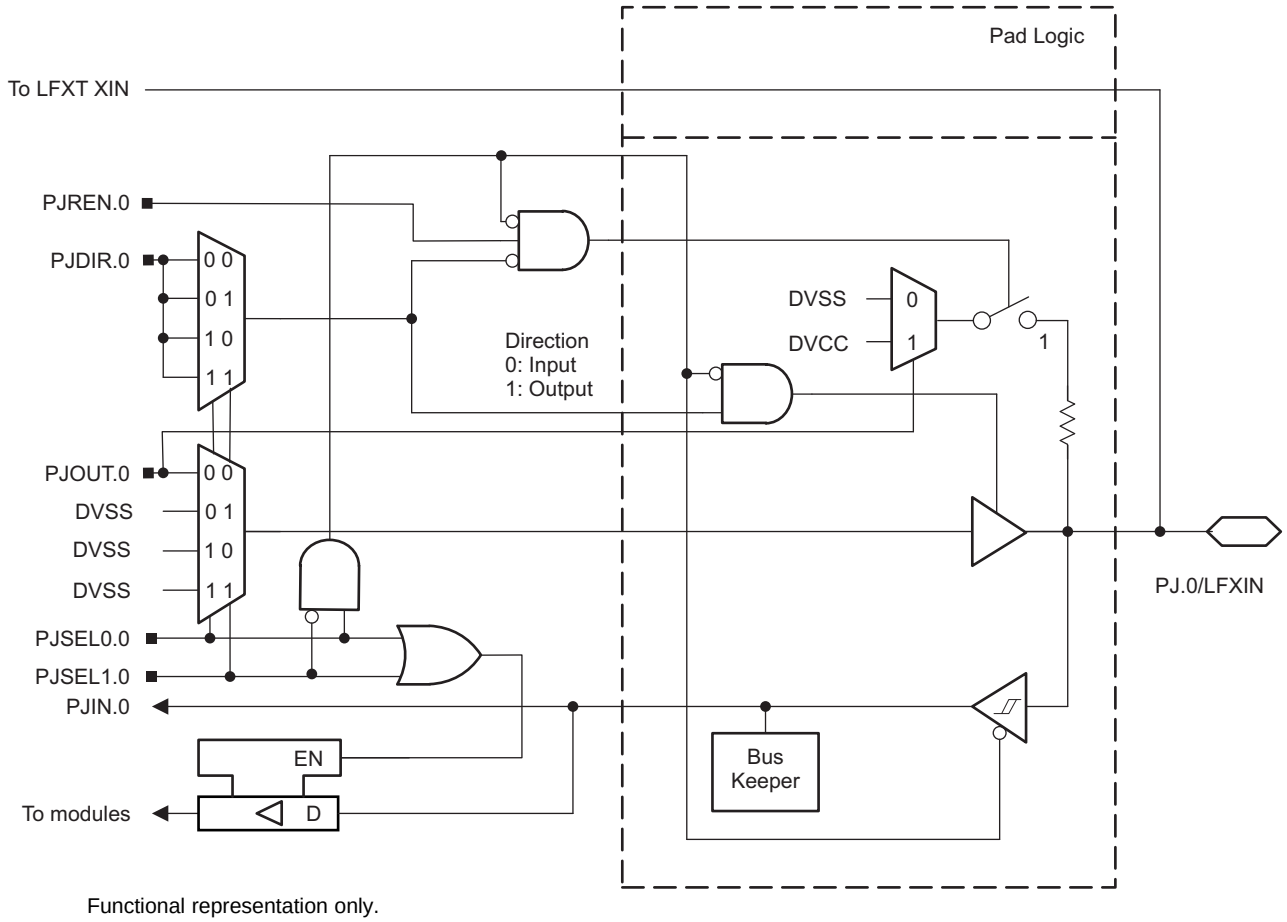


**Figure 6-16. Port PJ (PJ.0) Diagram**


Copyright © 2015–2016, Texas Instruments Incorporated

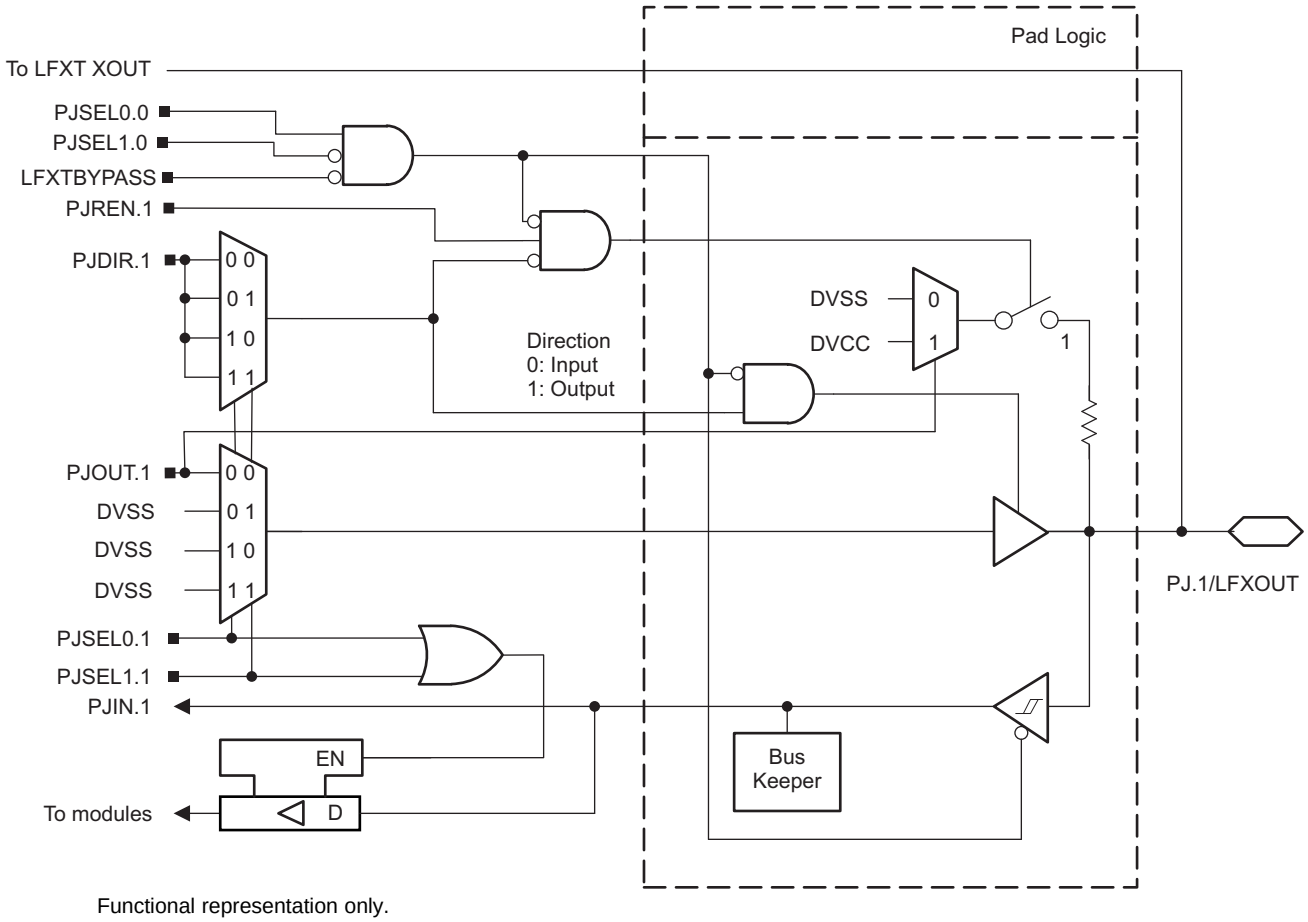


**Figure 6-17. Port PJ (PJ.1) Diagram**

### Table 6-81. Port PJ (PJ.0 and PJ.1) Pin Functions

| PIN NAME (PJ.x) | x | FUNCTION | CONTROL BITS OR SIGNALS (1) | | | | | |
|---|---|---|---|---|---|---|---|---|
| | | | PJDIR.x | PJSEL1.1 | PJSEL0.1 | PJSEL1.0 | PJSEL0.0 | LFXT BYPASS |
| PJ.0/LFXIN | 0 | PJ.0 (I/O) | I: 0; O: 1 | X | X | 0 | 0 | X |
| | | N/A | 0 | X | X | 1 | X | X |
| | | DVSS | 1 | | | | | |
| | | LFXIN crystal mode (2) | X | X | X | 0 | 1 | 0 |
| | | LFXIN bypass mode (2) | X | X | X | 0 | 1 | 1 |
| PJ.1/LFXOUT | 1 | PJ.1 (I/O) | I: 0; O: 1 | 0 | 0 | 0 | 0 | 0 |
| | | | | | | 1 | X | |
| | | | | | | X | X | 1 (3) |
| | | N/A | 0 | see (4) | see (4) | 0 | 0 | 0 |
| | | | | | | 1 | X | |
| | | | | | | X | X | 1 (3) |
| | | DVSS | 1 | see (4) | see (4) | 0 | 0 | 0 |
| | | | | | | 1 | X | |
| | | | | | | X | X | 1 (3) |
| | | LFXOUT crystal mode (2) | X | X | X | 0 | 1 | 0 |

(1) X = don't care
(2) Setting PJSEL1.0 = 0 and PJSEL0.0 = 1 causes the general-purpose I/O to be disabled. When LFXTBYPASS = 0, PJ.0 and PJ.1 are configured for crystal operation and PJSEL1.1 and PJSEL0.1 are do not care. When LFXTBYPASS = 1, PJ.0 is configured for bypass operation and PJ.1 is configured as general-purpose I/O.
(3) When PJ.0 is configured in bypass mode, PJ.1 is configured as general-purpose I/O.
(4) With PJSEL0.1 = 1 or PJSEL1.1 =1 the general-purpose I/O functionality is disabled. No input function is available. When configured as output, the pin is actively pulled to zero.


Copyright © 2015–2016, Texas Instruments Incorporated

### 6.12.21 Port PJ (PJ.2 and PJ.3) Input/Output With Schmitt Trigger

Figure 6-18 and Figure 6-19 show the port diagrams. Table 6-82 summarizes the selection of the pin functions.

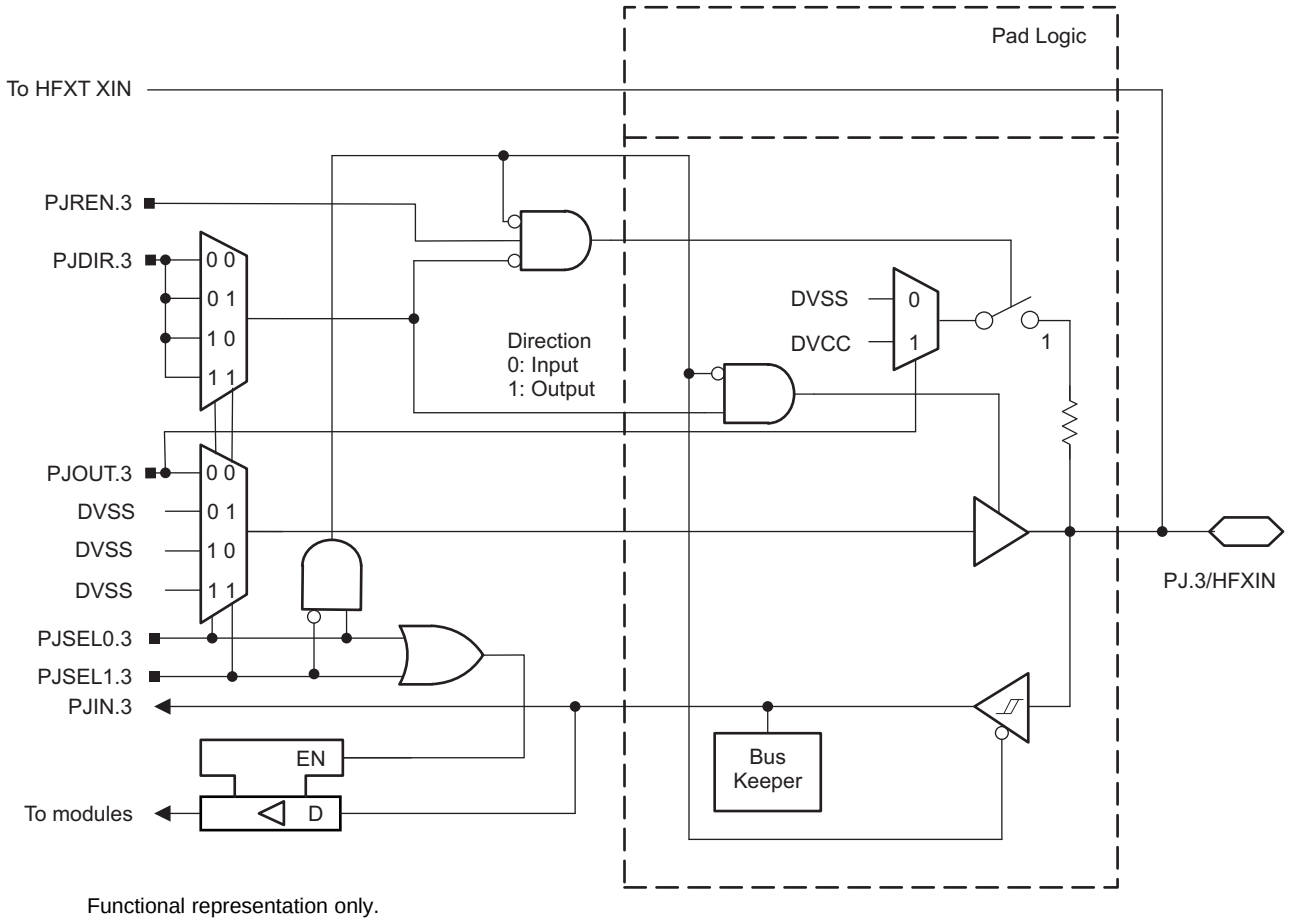


**Figure 6-18. Port PJ (PJ.2) Diagram**

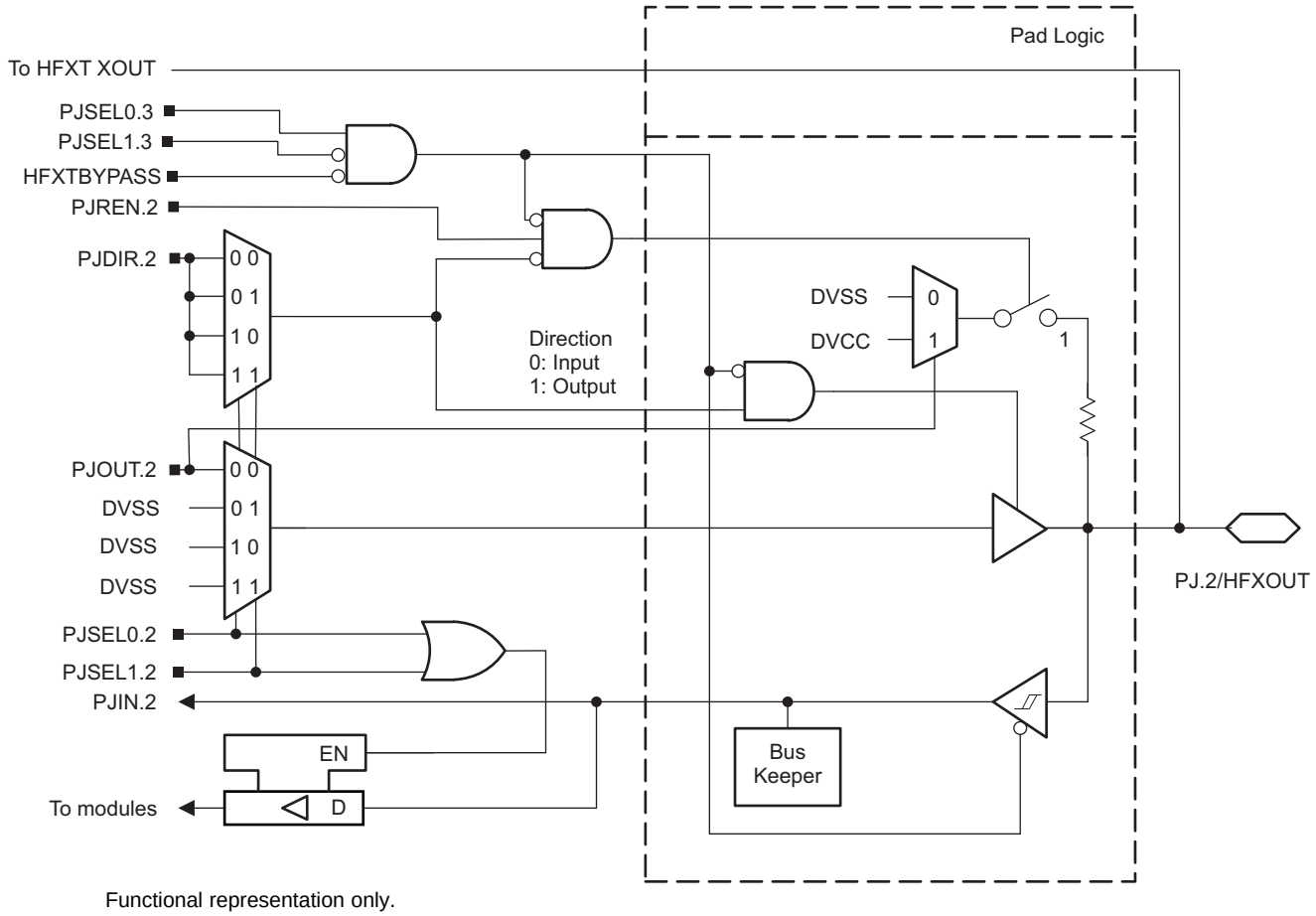


**Figure 6-19. Port PJ (PJ.3) Diagram**


Copyright © 2015–2016, Texas Instruments Incorporated

### Table 6-82. Port PJ (PJ.2 and PJ.3) Pin Functions

| PIN NAME (PJ.x) | x | FUNCTION | CONTROL BITS OR SIGNALS (1) | | | | | |
|---|---|---|---|---|---|---|---|---|
| | | | PJDIR.x | PJSEL1.2 | PJSEL0.2 | PJSEL1.3 | PJSEL0.3 | HFXT BYPASS |
| PJ.3/HFXIN | 3 | PJ.3 (I/O) | I: 0; O: 1 | X | X | 0 | 0 | X |
| | | N/A | 0 | X | X | 1 | X | X |
| | | DVSS | 1 | | | | | |
| | | HFXIN crystal mode (2) | X | X | X | 0 | 1 | 0 |
| | | HFXIN bypass mode (2) | X | X | X | 0 | 1 | 1 |
| PJ.2/HFXOUT | 2 | PJ.2 (I/O) | I: 0; O: 1 | 0 | 0 | 0 | 0 | 0 |
| | | | | | | 1 | X | |
| | | | | | | X | X | 1 (3) |
| | | N/A | 0 | see (4) | see (4) | 0 | 0 | 0 |
| | | | | | | 1 | X | |
| | | | | | | X | X | 1 (3) |
| | | DVSS | 1 | see (4) | see (4) | 0 | 0 | 0 |
| | | | | | | 1 | X | |
| | | | | | | X | X | 1 (3) |
| | | HFXOUT crystal mode (2) | X | X | X | 0 | 1 | 0 |

(1) X = don't care
(2) Setting PJSEL1.3 = 0 and PJSEL0.3 = 1 causes the general-purpose I/O to be disabled. When HFXTBYPASS = 0, PJ.2 and PJ.3 are configured for crystal operation and PJSEL1.2 and PJSEL0.2 are do not care. When HFXTBYPASS = 1, PJ.3 is configured for bypass operation and PJ.2 is configured as general-purpose I/O.
(3) When PJ.3 is configured in bypass mode, PJ.2 is configured as general-purpose I/O.
(4) With PJSEL0.2 = 1 or PJSEL1.2 =1 the general-purpose I/O functionality is disabled. No input function is available. When configured as output, the pin is actively pulled to zero.

### 6.12.22 Port PJ (PJ.4 and PJ.5) Input/Output With Schmitt Trigger

Table 6-83 summarizes the selection of the pin functions.

**Table 6-83. Port PJ (PJ.4 to PJ.5) Pin Functions**

| PIN NAME (PJ.x) | x | FUNCTION | CONTROL BITS OR SIGNALS (1) | | | SWJ MODE OF OPERATION (1) |
|---|---|---|---|---|---|---|
| | | | PJDIR.x | PJSEL1.x | PJSEL0.x | |
| PJ.4/TDI (2) | 4 | PJ.4 (I/O) | I: 0; O: 1 | 0 | 0 | X |
| | | TDI | X | 0 | 1 | JTAG (4 wire) |
| | | DVcc | | | | SWD (2 wire) |
| | | DVcc | X | 1 | X | X |
| PJ.5/TDO/SWO (3) | 5 | PJ.5 (I/O) | I: 0; O: 1 | 0 | 0 | X |
| | | TDO | X | 0 | 1 | JTAG (4 wire) |
| | | SWO | | | | SWD (2 wire) |
| | | Hi-Z | X | 1 | X | X |

(1) X indicates that the value of the control signal or mode of operation has no effect on the functionality.
(2) This pin is internally pulled up if PJSEL0.x is 1.
(3) When used in debug configuration, this pin must be pulled to ground through an external pulldown resistor.

### 6.12.23 Ports SWCLKTCK and SWDIOTMS With Schmitt Trigger

Table 6-84 summarizes the selection of the pin functions.

**Table 6-84. Ports SWCLKTCK and SWDIOTMS Pin Functions**

| PIN NAME | FUNCTION | SWJ MODE OF OPERATION |
|---|---|---|
| SWCLKTCK (1) | TCK (input) | JTAG (4 wire) |
| | SWCLK (input) | SWD (2 wire) |
| SWDIOTMS (2) | TMS (input) | JTAG (4 wire) |
| | SWDIO (I/O) | SWD (2 wire) |

(1) This pin is internally pulled to $DV_{SS}$.
(2) This pin is internal pulled to $DV_{CC}$.


Copyright © 2015–2016, Texas Instruments Incorporated

## 6.13 Device Descriptors (TLV)

Table 6-86 lists the contents of the device descriptor tag-length-value (TLV) structure for MSP432P401xx devices. Table 6-85 summarizes the Device IDs of the corresponding MSP432P401xx devices.

**Table 6-85. Device IDs**

| DEVICE | DEVICE ID |
|---|---|
| MSP432P401RIPZ | 0000A000h |
| MSP432P401MIPZ | 0000A001h |
| MSP432P401RIZXH | 0000A002h |
| MSP432P401MIZXH | 0000A003h |
| MSP432P401RIRGC | 0000A004h |
| MSP432P401MIRGC | 0000A005h |

**Table 6-86. Device Descriptor Table(1)**

| | DESCRIPTION | ADDRESS | VALUE |
|---|---|---|---|
| | TLV checksum | 00201000h | per unit |
| Info Block | Device Info Tag | 00201004h | 0000000Bh |
| | Device Info Length | 00201008h | 00000004h |
| | Device ID | 0020100Ch | See Table 6-85 |
| | Hardware Revision | 00201010h | per unit |
| | Boot-code Revision | 00201014h | per unit |
| | ROM Driver Library Revision | 00201018h | per unit |
| Die Record | Die Record Tag | 0020101Ch | 0000000Ch |
| | Die Record Length | 00201020h | 00000008h |
| | Die X Position | 00201024h | per unit |
| | Die Y Position | 00201028h | per unit |
| | Wafer ID | 0020102Ch | per unit |
| | Lot ID | 00201030h | per unit |
| | Reserved | 00201034h | per unit |
| | Reserved | 00201038h | per unit |
| | Reserved | 0020103Ch | per unit |
| | Test Results | 00201040h | per unit |
| Clock System Calibration | Clock System Calibration Tag | 00201044h | 00000003h |
| | Clock System Calibration Length | 00201048h | 00000010h |
| | DCO IR mode: Frequency calibration for DCORSEL 0 to 4 | 0020104Ch | per unit |
| | DCO IR mode: Frequency calibration for DCORSEL 5 | 00201050h | per unit |
| | Reserved | 00201054h | not defined |
| | Reserved | 00201058h | not defined |
| | Reserved | 0020105Ch | not defined |
| | Reserved | 00201060h | not defined |
| | DCO IR mode: DCO Constant (K) for DCORSEL 0 to 4 | 00201064h | per unit |
| | DCO IR mode: DCO Constant (K) for DCORSEL 5 | 00201068h | per unit |
| | DCO ER mode: Frequency calibration for DCORSEL 0 to 4 | 0020106Ch | per unit |
| | DCO ER mode: Frequency calibration for DCORSEL 5 | 00201070h | per unit |
| | Reserved | 00201074h | not defined |
| | Reserved | 00201078h | not defined |
| | Reserved | 0020107Ch | not defined |
| | Reserved | 00201080h | not defined |
| | DCO ER mode: DCO Constant (K) for DCORSEL 0 to 4 | 00201084h | per unit |
| | DCO ER mode: DCO Constant (K) for DCORSEL 5 | 00201088h | per unit |

(1) per unit = Content can differ from device to device.

Copyright © 2015–2016, Texas Instruments Incorporated

## Table 6-86. Device Descriptor Table[1] (continued)

| | DESCRIPTION | ADDRESS | VALUE |
|---|---|---|---|
| ADC14 Calibration | ADC14 Calibration Tag | 0020108Ch | 00000005h |
| | ADC14 Calibration Length | 00201090h | 00000018h |
| | ADC Gain Factor[2] | 00201094h | per unit |
| | Reserved | 00201098h | FFFFFFFFh |
| | Reserved | 0020109Ch | FFFFFFFFh |
| | Reserved | 002010A0h | FFFFFFFFh |
| | Reserved | 002010A4h | FFFFFFFFh |
| | Reserved | 002010A8h | FFFFFFFFh |
| | Reserved | 002010ACh | FFFFFFFFh |
| | Reserved | 002010B0h | FFFFFFFFh |
| | Reserved | 002010B4h | FFFFFFFFh |
| | Reserved | 002010B8h | FFFFFFFFh |
| | Reserved | 002010BCh | FFFFFFFFh |
| | Reserved | 002010C0h | FFFFFFFFh |
| | Reserved | 002010C4h | FFFFFFFFh |
| | Reserved | 002010C8h | FFFFFFFFh |
| | Reserved | 002010CCh | FFFFFFFFh |
| | Reserved | 002010D0h | FFFFFFFFh |
| | Reserved | 002010D4h | FFFFFFFFh |
| | ADC Offset[3] | 002010D8h | per unit |
| | ADC 1.2V Reference Temp. Sensor 30°C | 002010DCh | per unit |
| | ADC 1.2V Reference Temp. Sensor 85°C | 002010E0h | per unit |
| | ADC 1.45V Reference Temp. Sensor 30°C | 002010E4h | per unit |
| | ADC 1.45V Reference Temp. Sensor 85°C | 002010E8h | per unit |
| | ADC 2.5V Reference Temp. Sensor 30°C | 002010ECh | per unit |
| | ADC 2.5V Reference Temp. Sensor 85°C | 002010F0h | per unit |
| REF Calibration | REF Calibration Tag | 002010F4h | 00000008h |
| | REF Calibration Length | 002010F8h | 00000003h |
| | REF 1.2V Reference | 002010FCh | per unit |
| | REF 1.45V Reference | 00201100h | per unit |
| | REF 2.5V Reference | 00201104h | per unit |
| Flash Info | Flash Info Tag | 00201108h | 00000004h |
| | Flash Info Length | 0020110Ch | 00000002h |
| | Flash Maximum Programming Pulses | 00201110h | 00000005h |
| | Flash Maximum Erase Pulses | 00201114h | 0000014Eh |
| Random Number | 128-bit Random Number Tag | 00201118h | 0000000Dh |
| | Random Number Length | 0020111Ch | 00000004h |
| | 128-bit Random Number[4] | 00201120h | per unit |
| | | 00201124h | per unit |
| | | 00201128h | per unit |
| | | 0020112Ch | per unit |
| BSL Configuration | BSL Configuration Tag | 00201130h | 0000000Fh |
| | BSL Configuration Length | 00201134h | 00000004h |
| | BSL Peripheral Interface Selection | 00201138h | FFC2D0C0h |
| | BSL Port Interface Configuration for UART | 0020113Ch | FCFFFDA0h |
| | BSL Port Interface Configuration for SPI | 00201140h | F0FF9770h |
| | BSL Port Interface Configuration for I2C | 00201144h | FCFFFF72h |

(2) ADC Gain: The gain correction factor is measured at room temperature using a 2.5-V external voltage reference without internal buffer (ADC14VRSEL = Eh). Other settings (for example, using internal reference) can result in different correction factors.
(3) ADC Offset: The offset correction factor is measured at room temperature using ADC14VRSEL= Eh ($V_{R+}$ = 2.5 V external reference, $V_{R-}$ = on-board ground).
(4) 128-Bit Random Number: The random number is generated during production test using the CryptGenRandom() function from Microsoft®.


Copyright © 2015–2016, Texas Instruments Incorporated

**Table 6-86. Device Descriptor Table[(1)] (continued)**

| | DESCRIPTION | ADDRESS | VALUE |
|---|---|---|---|
| TLV End | TLV End Word | 00201148h | 0BD0E11Dh |
| | Reserved | 0020114Ch-00201FFFh | FFFFFFFFh |

## 6.14 Identification

### 6.14.1 ARM Cortex-M4F ROM Table-Based Part Number

MSP432P4xx family of devices incorporate a part number for the device in addition to the device IDs specified in the device descriptors (TLV) for the IDEs to recognize the device. This section describes how this information is organized on the device.

IEEE 1149.1 standard defines the use of a IDCODE register in the JTAG chain which should provide the fields as mentioned in Table 6-87

**Table 6-87. Structure of Device Identification Code**

| Bit Position | Field Description |
|---|---|
| 31–28 | Version |
| 27–12 | Part Number of the device |
| 11–1 | Manufacturer Identity |
| 0 | Reserved (Always tied to 1) |

On MSP432P4xx devices all the fields in Table 6-87 are implemented on the Cortex-M4 ROM table. The part number can be read by the IDE tools (TI internal or third party) to determine the device that it is working with.

Figure 6-20 shows the Peripheral ID register bit descriptions as per the Cortex-M4 specifications.

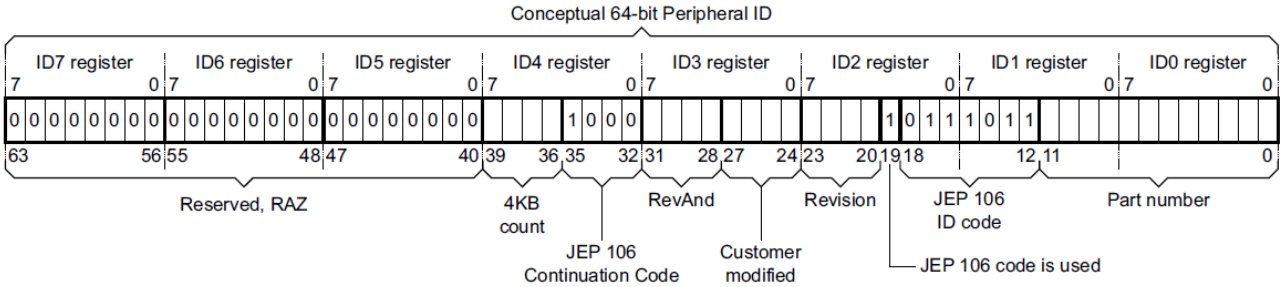


**Figure 6-20. Cortex-M4 Peripheral ID Register Description**

Refer to the *ARM Debug Interface V5 Architecture Specification* for bit-level details on the Cortex-M4 Peripheral ID registers.

From the figure it is evident that a one to one mapping is not possible for the following fields from Table 6-87

1. Version: IEEE 1149.1 defines a 4-bit field where as the Coresight compliant PID registers have 4 bits each for Revision (Major revision) and RevAnd (Minor revision)
2. Part Number: IEEE 1149.1 defines a 16-bit entity. However, the PID registers in the ROM table have only 12 bits reserved for this purpose (Part number in the PID1 and PID0 registers).

For the MSP432P4xx family, the Revision and RevAnd fields are used for tracking the major and minor revisions. Also the Customer modified (4-bit) field is used for extending the Part number to 16 bits, thereby accommodating all the fields needed by IEEE 1149.1 into the ROM table.

The ROM table with IEEE 1149.1 complaint device IDCODE for MSP432P401xx device example is 0000-1011-1001-1010-1111-0000-0010-1111 and is populated as shown in Figure 6-21.


Copyright © 2015–2016, Texas Instruments Incorporated

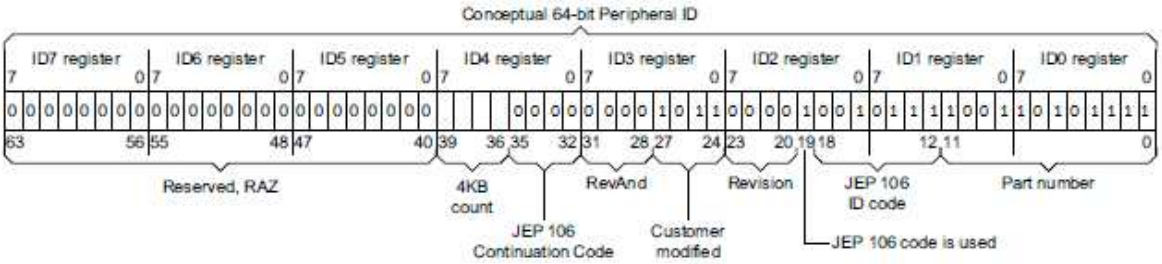


**Figure 6-21. Example of ROM PID Entries for MSP432P401xx Device**

# 7 Applications, Implementation, and Layout

**NOTE**

Information in the following Applications section is not part of the TI component specification, and TI does not warrant its accuracy or completeness. TI's customers are responsible for determining suitability of components for their purposes. Customers should validate and test their design implementation to confirm system functionality.

## 7.1 Device Connection and Layout Fundamentals

This section discusses the recommended guidelines when designing with the MSP432 microcontrollers. These guidelines are to make sure that the device has proper connections for powering, programming, debugging, and optimum analog performance.

### *7.1.1 Power Supply Decoupling and Bulk Capacitors*

TI recommends connecting a combination of a 4.7-µF plus a 100-nF low-ESR ceramic decoupling capacitor to each AVCC and DVCC pin (see Figure 7-1). Higher-value capacitors may be used but can impact supply rail ramp-up time. Decoupling capacitors must be placed as close as possible to the pins that they decouple (within a few millimeters). Additionally, TI recommends separated grounds with a single-point connection for better noise isolation from digital-to-analog circuits on the board and for high analog accuracy.

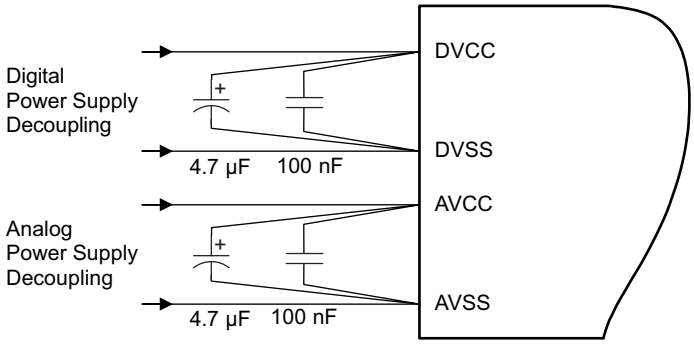


**Figure 7-1. Power Supply Decoupling**

### *7.1.2 External Oscillator*

The device supports a low-frequency crystal (32.768 kHz) on the LFXT pins and a high-frequency crystal on the HFXT pins. External bypass capacitors for the crystal oscillator pins are required.

It is also possible to apply digital clock signals to the LFXIN and HFXIN input pins that meet the specifications of the respective oscillator if the appropriate LFXTBYPASS or HFXTBYPASS mode is selected. In this case, the associated LFXOUT and HFXOUT pins can be used for other purposes.

Figure 7-2 shows a typical connection diagram.

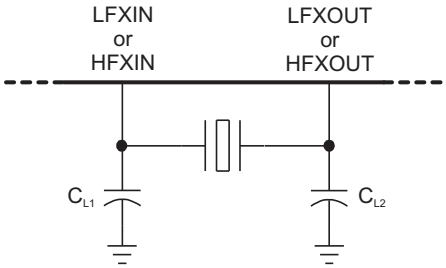


**Figure 7-2. Typical Crystal Connection**


Copyright © 2015–2016, Texas Instruments Incorporated

See *MSP430 32-kHz Crystal Oscillators* for more information on selecting, testing, and designing a crystal oscillator with the MSP432 devices.

### 7.1.3 General Layout Recommendations

- Proper grounding and short traces for external crystal to reduce parasitic capacitance. See *MSP430 32-kHz Crystal Oscillators* for recommended layout guidelines.
- Proper bypass capacitors on DVCC, AVCC, and reference pins if used.
- Avoid routing any high-frequency signal close to an analog signal line. For example, keep digital switching signals such as PWM or JTAG signals away from the oscillator circuit.
- See *Circuit Board Layout Techniques* for a detailed discussion of printed-circuit-board (PCB) layout considerations. This document is written primarily about op amps, but the guidelines are generally applicable for all mixed-signal applications.
- Proper ESD level protection should be considered to protect the device from unintended high-voltage electrostatic discharge. See *MSP430 System-Level ESD Considerations* for guidelines.

### 7.1.4 Do's and Don'ts

TI recommends powering AVCC and DVCC pins from the same source. At a minimum, during power up, power down, and device operation, the voltage difference between AVCC and DVCC must not exceed the limits specified in *Absolute Maximum Ratings*. Exceeding the specified limits may cause malfunction of the device.

## 7.2 Peripheral and Interface-Specific Design Information

### 7.2.1 ADC14 Peripheral

#### 7.2.1.1 Partial Schematic

Figure 7-3 shows a partial schematic of the ADC14 external connections.

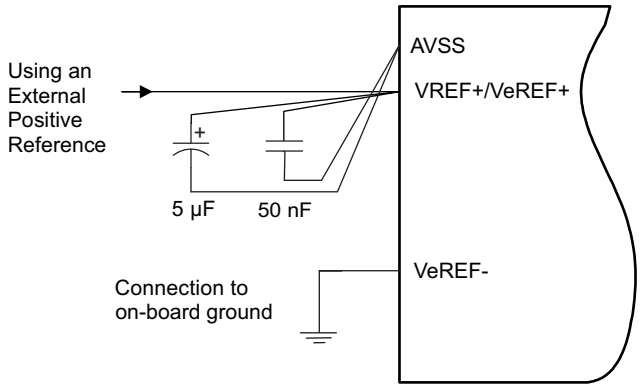


**Figure 7-3. ADC14 Grounding and Noise Considerations**

#### 7.2.1.2 Design Requirements

As with any high-resolution ADC, appropriate PCB layout and grounding techniques should be followed to eliminate ground loops, unwanted parasitic effects, and noise.

Ground loops are formed when return current from the ADC flows through paths that are common with other analog or digital circuitry. If care is not taken, this current can generate small unwanted offset voltages that can add to or subtract from the reference or input voltages of the ADC. The general guidelines in Section 7.1.1 combined with the connections shown in Section 7.2.1.1 prevent this.

In addition to grounding, ripple and noise spikes on the power-supply lines that are caused by digital switching or switching power supplies can corrupt the conversion result. A noise-free design using separate analog and digital ground planes with a single-point connection is recommend to achieve high accuracy.

Figure 7-3 shows the recommended decoupling circuit when an external voltage reference is used.

The reference voltage must be a stable voltage for accurate measurements. The capacitor values that are selected in the general guidelines filter out the high- and low-frequency ripple before the reference voltage enters the device. In this case, the 5-µF capacitor is used to buffer the reference pin and filter any low-frequency ripple. A 50-nF bypass capacitor is used to filter out any high-frequency noise.

#### 7.2.1.3 Layout Guidelines

Component that are shown in the partial schematic (see Figure 7-3) should be placed as close as possible to the respective device pins. Avoid long traces, because they add additional parasitic capacitance, inductance, and resistance on the signal.

Avoid routing analog input signals close to a high-frequency pin (for example, a high-frequency PWM), because the high-frequency switching can be coupled into the analog signal.

If differential mode is used for the ADC14, the analog differential input signals must be routed closely together to minimize the effect of noise on the resulting signal.


Copyright © 2015–2016, Texas Instruments Incorporated

# 8 Device and Documentation Support

## 8.1 Getting Started and Next Steps

For more information on the MSP432 family of microcontrollers and the tools and libraries that are available to help with your development, visit Getting Started with MSP432P4x.

## 8.2 Device and Development Tool Nomenclature

To designate the stages in the product development cycle, TI assigns prefixes to the part numbers of all MSP432 MCU devices and support tools. Each MSP432 MCU commercial family member has one of three prefixes: MSP, PMS, or XMS (for example, MSP432P401R). Texas Instruments recommends two of three possible prefix designators for its support tools: MSP and MSPX. These prefixes represent evolutionary stages of product development from engineering prototypes (with XMS for devices and MSPX for tools) through fully qualified production devices and tools (with MSP for devices and MSP for tools).

Device development evolutionary flow:

**XMS** – Experimental device that is not necessarily representative of the final device's electrical specifications

**PMS** – Final silicon die that conforms to the device's electrical specifications but has not completed quality and reliability verification

**MSP** – Fully qualified production device

Support tool development evolutionary flow:

**MSPX** – Development-support product that has not yet completed Texas Instruments internal qualification testing.

**MSP** – Fully-qualified development-support product

XMS and PMS devices and MSPX development-support tools are shipped against the following disclaimer:

"Developmental product is intended for internal evaluation purposes."

MSP devices and MSP development-support tools have been characterized fully, and the quality and reliability of the device have been demonstrated fully. TI's standard warranty applies.

Predictions show that prototype devices (XMS and PMS) have a greater failure rate than the standard production devices. Texas Instruments recommends that these devices not be used in any production system because their expected end-use failure rate still is undefined. Only qualified production devices are to be used.

TI device nomenclature also includes a suffix with the device family name. This suffix indicates the package type (for example, PZP) and temperature range (for example, T). Figure 8-1 provides a legend for reading the complete device name for any family member.

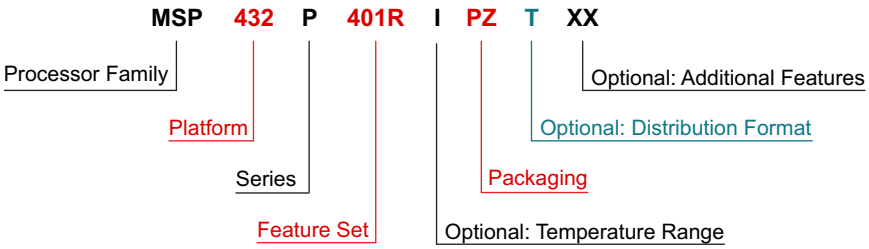


| | | | | |
|---|---|---|---|---|
| **Processor Family** | MSP = Mixed-Signal Processor<br>XMS = Experimental Silicon | | | |
| **Platform** | 432 = TI's 32-Bit Low-Power Microcontroller Platform | | | |
| **Series** | P = Performance and Low-Power Series | | | |
| **Feature Set** | **First Digit**<br>4 = Flash-based devices up to 48 MHz | **Second Digit**<br>0 = General Purpose | **Third Digit**<br>1 = ADC14 | **Fourth Digit**<br>R = 256KB of Flash 64KB of SRAM<br>M = 128KB of Flash 32KB of SRAM |
| **Optional: Temperature Range** | S = 0°C to 50°C<br>I = –40°C to 85°C<br>T = –40°C to 105°C | | | |
| **Packaging** | http://www.ti.com/packaging | | | |
| **Optional: Distribution Format** | T = Small Reel<br>R = Large Reel<br>No Markings = Tube or Tray | | | |
| **Optional: Additional Features** | -EP = Enhanced Product (–40°C to 105°C)<br>-HT = Extreme Temperature Parts (–55°C to 150°C)<br>-Q1 = Automotive Q100 Qualified | | | |

**Figure 8-1. Device Nomenclature**


Copyright © 2015–2016, Texas Instruments Incorporated

## 8.3 Tools and Software

All MSP microcontrollers are supported by a wide variety of software and hardware development tools. Tools are available from TI and various third parties. See them all at Overview for Low Power + Performance.

lists the debug features supported in the hardware of the MSP432P401x MCUs. See the *Code Composer Studio for MSP430 User's Guide* for details on the available hardware features. See *Advanced Debugging Using the Enhanced Emulation Module (EEM) With Code Composer Studio Version 6* and *MSP430™ Advanced Power Optimizations: ULP Advisor™ and EnergyTrace™ Technology* for further usage information.

**Table 8-1. Hardware Debug Features**

| FAMILY | JTAG | SWD | NUMBER OF BREAKPOINTS | ITM | DWT | FPB |
|---|---|---|---|---|---|---|
| MSP432P4xx | Yes | Yes | 6 | Yes | Yes | Yes |

EnergyTrace technology is supported with Code Composer Studio version 6.0 and newer. It requires specialized debugger circuitry, which is supported with the second-generation onboard eZ-FET flash emulation tool and second-generation stand-alone MSP-FET JTAG emulator. See *MSP430 Advanced Power Optimizations: ULP Advisor™ and EnergyTrace™ Technology*, the *Code Composer Studio for MSP430 User's Guide*, and the *MSP430 Hardware Tools User's Guide* for more detailed information.

**Design Kits and Evaluation Modules**

**100-Pin Target Development Board for MSP432P4x MCUs** The MSP-TS432PZ100 is a stand-alone ZIF socket target board used to program and debug the MSP432 in-system through the JTAG interface or the Serial Wire Debug (SWD 2-wire JTAG) protocol. The development board supports all MSP432P401x flash parts in a 100-pin LQFP package (TI package code: PZ).

**MSP432P401R LaunchPad™ Development Kit** The MSP432P401R LaunchPad development kit enables you to develop high-performance applications that benefit from low-power operation. The kit features the MSP432P401R – which includes a 48-MHz ARM Cortex M4F, 95-µA/MHz active power, and 850-nA RTC operation, 14-bit 1-MSPS differential SAR ADC, and AES256 accelerator.

**Software**

**MSP432P401x Code Examples** C Code examples are available for every MSP device that configures each of the integrated peripherals for various application needs.

**MSP432 Capacitive Touch Software Library** Free libraries for enabling capacitive touch capabilities on MSP432 MCUs.

**MSP EnergyTrace™ Technology** EnergyTrace technology for MSP430 microcontrollers is an energy-based code analysis tool that measures and displays the application's energy profile and helps to optimize it for ultra-low-power consumption.

**ULP (Ultra-Low Power) Advisor** ULP (Ultra-Low Power) Advisor is a tool for guiding developers to write more efficient code to fully utilize the unique ultra-low power features of MSP and MSP432 microcontrollers. Aimed at both experienced and new microcontroller developers, ULP Advisor checks your code against a thorough ULP checklist to squeeze every last nano amp out of your application.

**RTOS for MSP432** MSP432 MCUs offer compatibility with several TI and third party Real-Time Operating Systems (RTOS). Visit this link to learn about the key features of each to suit your design needs.

Copyright © 2015–2016, Texas Instruments Incorporated

**TI-RTOS: Real-Time Operating System (RTOS)** TI-RTOS accelerates development schedules by eliminating the need to create basic system software functions from scratch. TI-RTOS scales from a minimal footprint real-time multitasking kernel - TI-RTOS Kernel (formerly known as SYS/BIOS) - to a complete RTOS solution including protocol stacks, multicore communications, device drivers and power management. By providing essential system software components pre-tested and pre-integrated, TI-RTOS enables developers to focus on differentiating their application.

**MSP Driver Library** Driver Library's abstracted API keeps you above the bits and bytes of the MSP430 hardware by providing easy-to-use function calls. Thorough documentation is delivered through a helpful API Guide, which includes details on each function call and the recognized parameters. Developers can use Driver Library functions to write complete projects with minimal overhead.

**MSP Graphics Library** The MSP Graphics Library is a royalty-free set of graphics primitives for creating graphical user interfaces on MSP430 and MSP432 microcontroller-based boards that have a graphical display. The graphical library consists of two building layers of functionality: the display driver layer, specific to the display in use, and the graphics primitives layer, which draws points, lines, rectangles, circles, text, and bitmap images.

**Digital Signal Processing Library** The Texas Instruments™ Digital Signal Processing library is a set of highly optimized functions to perform many common signal processing operations on fixed-point numbers for MSP430™ and MSP432™ microcontrollers. This function set is typically utilized for applications where processing-intensive transforms are done in real-time for minimal energy and with very high accuracy. This library's optimal utilization of the MSP families' intrinsic hardware for fixed-point math allows for significant performance gains.

**Development Tools**

**Code Composer Studio Integrated Development Environment for MSP Microcontrollers** Code Composer Studio is an integrated development environment (IDE) that supports all MSP microcontroller devices. Code Composer Studio comprises a suite of embedded software utilities used to develop and debug embedded applications. It includes an optimizing C/C++ compiler, source code editor, project build environment, debugger, profiler, and many other features. For more information, see the *Code Composer Studio 6.1 for MSP432 User's Guide*.

**ARM® Keil® MDK – Free 32KB IDE** The ARM Keil MDK is a complete debugger and C/C++ compiler toolchain for building and debugging embedded applications. Keil MDK supports the low-power + high performance MSP432 MCU family, and includes a fully integrated debugger for source and disassembly level debugging with support for complex code and data breakpoint. For more information, see the *ARM Keil MDK Version 5 for MSP432 User's Guide*.

**IAR Embedded Workbench Kickstart** IAR Embedded Workbench Kickstart for MSP is a complete debugger and C/C++ compiler toolchain for building and debugging embedded applications based on MSP430 and MSP432 microcontrollers. The code size limitation of C/C++ compiler is set to 8 KB for MSP430 devices and 32KB for MSP432 devices. For more information, see the *IAR Embedded Workbench for ARM 7.x for MSP432 User's Guide*.

**Debuggers for MSP432** MSP432 MCUs are designed to work with a variety of debuggers from Texas Instruments and third party vendors.

**MSP MCU Programmer and Debugger** The MSP-FET is a powerful emulation development tool – often called a debug probe – which allows users to quickly begin application development on MSP low-power microcontrollers (MCU).

**MSP-GANG Production Programmer** The MSP Gang Programmer is an MSP430 and MSP432 device programmer that can program up to eight identical MSP430 or MSP432 Flash or FRAM devices at the same time. The MSP Gang Programmer connects to a host PC using a standard RS-232 or USB connection and provides flexible programming options that allow the user to fully customize the process.

**Pin Mux Tool** The Pin MUX Utility is a software tool that provides a graphical user interface for configuring pin multiplexing settings, resolving conflicts, and specifying I/O cell characteristics for TI MPUs. Results are output as C header and code files that can be imported into software development kits (SDK) or used to configure customer's custom software. Version 3 of the Pin Mux utility adds the capability of automatically selecting a mux configuration that satisfies the entered requirements.


Copyright © 2015–2016, Texas Instruments Incorporated

## 8.4 Documentation Support

The following documents describe the MSP430P401x MCUs. Copies of these documents are available on the TI website.

### Receiving Notification of Document Updates

To receive notification of documentation updates—including silicon errata—go to the product folder for your device on ti.com (for example, MSP432P401R). In the upper right corner, click the "Alert me" button. This registers you to receive a weekly digest of product information that has changed (if any). For change details, check the revision history of any revised document.

### Errata

**MSP432P401R Device Erratasheet** Describes the known exceptions to the functional specifications for each silicon revision of this device.

**MSP432P401M Device Erratasheet** Describes the known exceptions to the functional specifications for each silicon revision of this device.

### User's Guides

**MSP432P4xx Family Technical Reference Manual** Detailed description of all modules and peripherals available in this device family.

**Code Composer Studio 6.1 for MSP432 User's Guide** This manual describes the use of the TI Code Composer Studio IDE (CCS) version 6.1 with the MSP432 low-power microcontrollers.

**IAR Embedded Workbench for ARM 7.x for MSP432 User's Guide** This manual describes the use of IAR Embedded Workbench for ARM (EWARM) version 7.x with the MSP432 low-power microcontrollers.

**ARM Keil MDK Version 5 for MSP432 User's Guide** This user's guide describes the use of the ARM Keil MDK version 5 with the MSP432 low-power microcontrollers.

**GCC ARM Embedded Toolchain for MSP432 User's Guide** This manual describes the setup and basic operation of the MSP432 programming and debug using GCC ARM compiler and the GDB debugger.

**MSP432P401R Bootloader (BSL) User's Guide** The MSP432 BSL enables users to communicate with embedded memory in the MSP432 microcontroller during the prototyping phase, final production, and in service. Both the programmable memory (flash memory) and the data memory (RAM) can be modified as required.

**MSP432 Capacitive Touch Software Library Programmer's Guide** MSP432 microcontrollers are equipped with the peripherals needed to perform a capacitance measurement. The purpose of the capacitive touch software library is to create a single interface that can be integrated with the peripheral set found in MSP432 devices. This document explains the capacitive touch library configuration and use with MSP432 devices.

### Application Reports

**MSP432 Platform Porting** The goals for this porting guide is to help developers accurately assess the effort to port an existing application from one MSP platform to another, ultimately to derive a porting strategy with complete hardware and software coverage that properly ports the existing application without introducing bugs due to platform differences yet taking advantages of the unique features or performance improvements introduced in the new platform.

**Designing an Ultra-Low-Power (ULP) Application With MSP432™ Microcontrollers** With the growing system complexity in ultra-low-power microcontroller applications, minimizing the overall energy consumption is one of the most difficult problems to solve. Multiple aspects including silicon, other onboard hardware components, and application software must be considered. There are some obvious generic techniques that can be used to reduce energy consumption such as reducing operating voltage or frequency. Many of these generic techniques may not greatly reduce energy consumption independently, but taken as a whole, the results can be significant, as there are many interdependencies across these components.

**Maximizing MSP432P4xx Voltage Regulator Efficiency** This application report describes the relationship of the MSP432P4xx DC-DC and LDO, provides guidelines on choosing which is most efficient for your application, and gives board layout considerations for the DC-DC.

**Leveraging Low-Frequency Power Modes on MSP432P4xx Microcontrollers** Low power consumption is very important in all battery powered embedded applications. But the operating frequency of these embedded applications can be diverse based the needs of the application. Some applications might require operating at higher frequencies, in the order of several megahertz, while some other applications might require operating at lower frequencies, in the order of a few tens or a few hundreds of kilohertz. There are several microcontrollers in the market that offer good active mode power consumption when the operating frequency is in the order of several megahertz. But it is a challenge to get the power consumption low when the operating frequency is in the order of kilohertz. The low-frequency power modes available on the MSP432P4xx microcontrollers offer very low power consumption when low frequency of operation is used by the target application.

**Software IP Protection on MSP432P4xx Microcontrollers** Differentiations in embedded software applications enable differentiated products. Companies invest significant money in building differentiated software application. Hence, protecting this investment (application or portions of the application) is extremely important. This application note describes how to protect software intellectual property (IP) running on the Texas Instruments MSP432P401x family of microcontrollers.

**Code Conversion Application for MSP432P401R** This application note describes the use of the code conversion application delivered with version 2.0.0 (and above) of the MSP432P401R device header files. In these revisions of the MSP432P401R device header files, the coding style has been adapted to CMSIS. This may lead to compilation errors in user code if the code is not converted. MSP430 style register definitions have also been removed with exception of legacy 16-bit IPs (see msp432p401r_classic.h).

## 8.5 Related Links

Table 8-2 lists quick access links. Categories include technical documents, support and community resources, tools and software, and quick access to sample or buy.

**Table 8-2. Related Links**

| PARTS | PRODUCT FOLDER | SAMPLE & BUY | TECHNICAL DOCUMENTS | TOOLS & SOFTWARE | SUPPORT & COMMUNITY |
|---|---|---|---|---|---|
| MSP432P401R | Click here | Click here | Click here | Click here | Click here |
| MSP432P401M | Click here | Click here | Click here | Click here | Click here |

## 8.6 Community Resources

The following links connect to TI community resources. Linked contents are provided "AS IS" by the respective contributors. They do not constitute TI specifications and do not necessarily reflect TI's views; see TI's Terms of Use.

TI E2E™ Community
*TI's Engineer-to-Engineer (E2E) Community*. Created to foster collaboration among engineers. At e2e.ti.com, you can ask questions, share knowledge, explore ideas, and help solve problems with fellow engineers.

TI Embedded Processors Wiki
*Texas Instruments Embedded Processors Wiki*. Established to help developers get started with embedded processors from Texas Instruments and to foster innovation and growth of general knowledge about the hardware and software surrounding these devices.

## 8.7 Trademarks

MSP432, MSP430, ULP Advisor, EnergyTrace, LaunchPad, Texas Instruments, E2E are trademarks of Texas Instruments.
ARM, Cortex, Thumb, Keil are registered trademarks of ARM Ltd.
ULPBench, ULPMark are trademarks of EEMBC.
All other trademarks are the property of their respective owners.


Copyright © 2015–2016, Texas Instruments Incorporated

## 8.8 Electrostatic Discharge Caution

This integrated circuit can be damaged by ESD. Texas Instruments recommends that all integrated circuits be handled with appropriate precautions. Failure to observe proper handling and installation procedures can cause damage.

ESD damage can range from subtle performance degradation to complete device failure. Precision integrated circuits may be more susceptible to damage because very small parametric changes could cause the device not to meet its published specifications.

## 8.9 Export Control Notice

Recipient agrees to not knowingly export or re-export, directly or indirectly, any product or technical data (as defined by the U.S., EU, and other Export Administration Regulations) including software, or any controlled product restricted by other applicable national regulations, received from disclosing party under nondisclosure obligations (if any), or any direct product of such technology, to any destination to which such export or re-export is restricted or prohibited by U.S. or other applicable laws, without obtaining prior authorization from U.S. Department of Commerce and other competent Government authorities to the extent required by those laws.

## 8.10 Glossary

**TI Glossary** This glossary lists and explains terms, acronyms, and definitions.

# 9 Mechanical, Packaging, and Orderable Information

The following pages include mechanical, packaging, and orderable information. This information is the most current data available for the designated devices. This data is subject to change without notice and revision of this document. For browser-based versions of this data sheet, refer to the left-hand navigation.


Copyright © 2015–2016, Texas Instruments Incorporated

## PACKAGING INFORMATION

| Orderable Device | Status (1) | Package Type | Package Drawing | Pins | Package Qty | Eco Plan (2) | Lead/Ball Finish (6) | MSL Peak Temp (3) | Op Temp (°C) | Device Marking (4/5) | Samples |
|---|---|---|---|---|---|---|---|---|---|---|---|
| MSP432P401MIPZ | PREVIEW | LQFP | PZ | 100 | 90 | TBD | Call TI | Call TI | -40 to 85 | | |
| MSP432P401MIPZR | PREVIEW | LQFP | PZ | 100 | 1000 | Green (RoHS & no Sb/Br) | CU NIPDAU | Level-3-260C-168 HR | -40 to 85 | MSP432P401M | |
| MSP432P401MIRGC | PREVIEW | VQFN | RGC | 64 | 100 | TBD | Call TI | Call TI | -40 to 85 | | |
| MSP432P401MIRGCR | PREVIEW | VQFN | RGC | 64 | 2000 | TBD | Call TI | Call TI | -40 to 85 | | |
| MSP432P401MIRGCT | PREVIEW | VQFN | RGC | 64 | 250 | TBD | Call TI | Call TI | -40 to 85 | | |
| MSP432P401MIZXH | PREVIEW | NFBGA | ZXH | 80 | 360 | TBD | Call TI | Call TI | -40 to 85 | | |
| MSP432P401MIZXHR | PREVIEW | NFBGA | ZXH | 80 | 2500 | TBD | Call TI | Call TI | -40 to 85 | | |
| MSP432P401MIZXHT | PREVIEW | NFBGA | ZXH | 80 | 250 | TBD | Call TI | Call TI | -40 to 85 | | |
| MSP432P401RIPZR | PREVIEW | LQFP | PZ | 100 | 1000 | Green (RoHS & no Sb/Br) | CU NIPDAU | Level-3-260C-168 HR | -40 to 85 | MSP432P401R | |
| MSP432P401RIRGC | PREVIEW | VQFN | RGC | 64 | 100 | TBD | Call TI | Call TI | -40 to 85 | | |
| MSP432P401RIRGCR | PREVIEW | VQFN | RGC | 64 | 2000 | TBD | Call TI | Call TI | -40 to 85 | | |
| MSP432P401RIRGCT | PREVIEW | VQFN | RGC | 64 | 250 | TBD | Call TI | Call TI | -40 to 85 | | |
| MSP432P401RIZXH | PREVIEW | NFBGA | ZXH | 80 | 360 | TBD | Call TI | Call TI | -40 to 85 | | |
| MSP432P401RIZXHR | PREVIEW | NFBGA | ZXH | 80 | 2500 | TBD | Call TI | Call TI | -40 to 85 | | |
| MSP432P401RIZXHT | PREVIEW | NFBGA | ZXH | 80 | 250 | TBD | Call TI | Call TI | -40 to 85 | | |
| XMS432P401MIPZR | PREVIEW | LQFP | PZ | 100 | 1000 | TBD | Call TI | Call TI | -40 to 85 | | |
| XMS432P401RIPZR | PREVIEW | LQFP | PZ | 100 | 1000 | TBD | Call TI | Call TI | -40 to 85 | | |

(1) The marketing status values are defined as follows:
**ACTIVE:** Product device recommended for new designs.
**LIFEBUY:** TI has announced that the device will be discontinued, and a lifetime-buy period is in effect.
**NRND:** Not recommended for new designs. Device is in production to support existing customers, but TI does not recommend using this part in a new design.
**PREVIEW:** Device has been announced but is not in production. Samples may or may not be available.
**OBSOLETE:** TI has discontinued the production of the device.

(2) Eco Plan - The planned eco-friendly classification: Pb-Free (RoHS), Pb-Free (RoHS Exempt), or Green (RoHS & no Sb/Br) - please check http://www.ti.com/productcontent for the latest availability information and additional product content details.
**TBD:** The Pb-Free/Green conversion plan has not been defined.
**Pb-Free (RoHS):** TI's terms "Lead-Free" or "Pb-Free" mean semiconductor products that are compatible with the current RoHS requirements for all 6 substances, including the requirement that lead not exceed 0.1% by weight in homogeneous materials. Where designed to be soldered at high temperatures, TI Pb-Free products are suitable for use in specified lead-free processes.
**Pb-Free (RoHS Exempt):** This component has a RoHS exemption for either 1) lead-based flip-chip solder bumps used between the die and package, or 2) lead-based die adhesive used between the die and leadframe. The component is otherwise considered Pb-Free (RoHS compatible) as defined above.

**Green (RoHS & no Sb/Br):** TI defines "Green" to mean Pb-Free (RoHS compatible), and free of Bromine (Br) and Antimony (Sb) based flame retardants (Br or Sb do not exceed 0.1% by weight in homogeneous material)

**(3)** MSL, Peak Temp. - The Moisture Sensitivity Level rating according to the JEDEC industry standard classifications, and peak solder temperature.

**(4)** There may be additional marking, which relates to the logo, the lot trace code information, or the environmental category on the device.

**(5)** Multiple Device Markings will be inside parentheses. Only one Device Marking contained in parentheses and separated by a "~" will appear on a device. If a line is indented then it is a continuation of the previous line and the two combined represent the entire Device Marking for that device.

**(6)** Lead/Ball Finish - Orderable Devices may have multiple material finish options. Finish options are separated by a vertical ruled line. Lead/Ball Finish values may wrap to two lines if the finish value exceeds the maximum column width.

**Important Information and Disclaimer:**The information provided on this page represents TI's knowledge and belief as of the date that it is provided. TI bases its knowledge and belief on information provided by third parties, and makes no representation or warranty as to the accuracy of such information. Efforts are underway to better integrate information from third parties. TI has taken and continues to take reasonable steps to provide representative and accurate information but may not have conducted destructive testing or chemical analysis on incoming materials and chemicals. TI and TI suppliers consider certain information to be proprietary, and thus CAS numbers and other limited information may not be available for release.

In no event shall TI's liability arising out of such information exceed the total purchase price of the TI part(s) at issue in this document sold by TI to Customer on an annual basis.

RGC(S–PVQFN–N64) CUSTOM DEVICE PLASTIC QUAD FLATPACK NO–LEAD

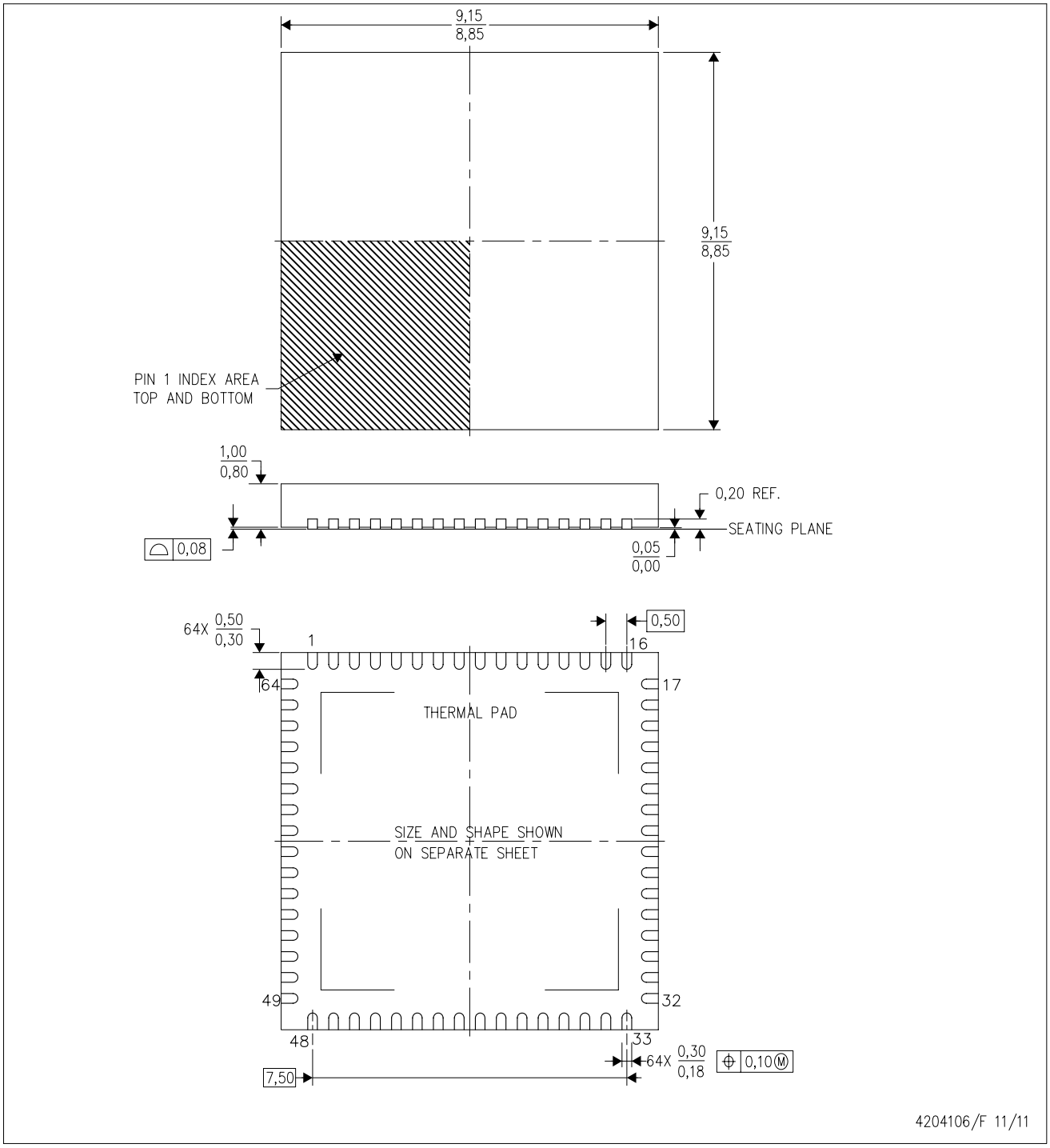


NOTES:
A. All linear dimensions are in millimeters. Dimensioning and tolerancing per ASME Y14.5–1994.
B. This drawing is subject to change without notice.
C. Quad Flatpack, No–leads (QFN) package configuration.
D. The package thermal pad must be soldered to the board for thermal and mechanical performance.
E. See the additional figure in the Product Data Sheet for details regarding the exposed thermal pad features and dimensions.

**PZ (S-PQFP-G100)** **PLASTIC QUAD FLATPACK**

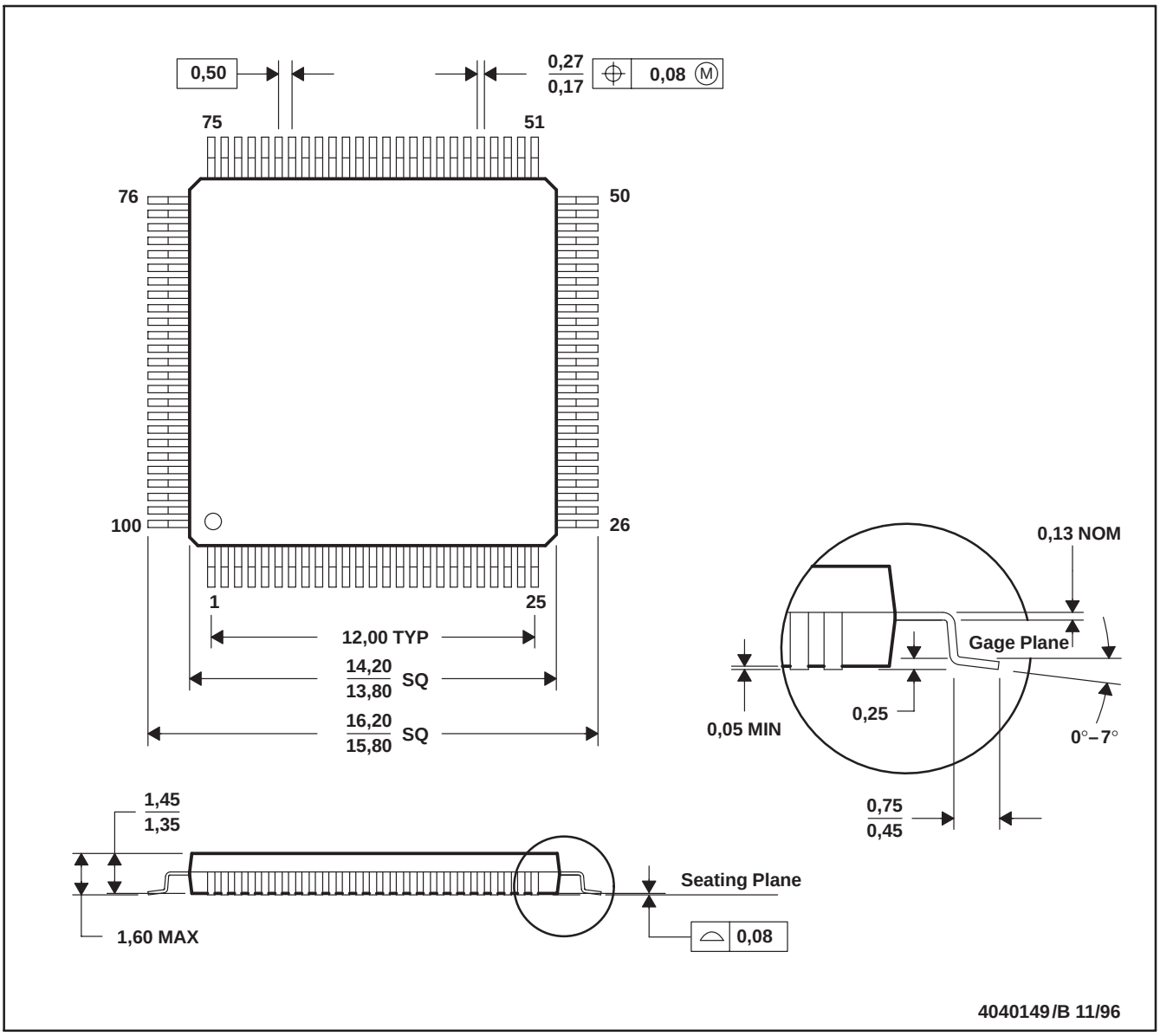


NOTES: A. All linear dimensions are in millimeters.
B. This drawing is subject to change without notice.
C. Falls within JEDEC MS-026

## IMPORTANT NOTICE

Texas Instruments Incorporated and its subsidiaries (TI) reserve the right to make corrections, enhancements, improvements and other changes to its semiconductor products and services per JESD46, latest issue, and to discontinue any product or service per JESD48, latest issue. Buyers should obtain the latest relevant information before placing orders and should verify that such information is current and complete. All semiconductor products (also referred to herein as “components”) are sold subject to TI’s terms and conditions of sale supplied at the time of order acknowledgment.

TI warrants performance of its components to the specifications applicable at the time of sale, in accordance with the warranty in TI’s terms and conditions of sale of semiconductor products. Testing and other quality control techniques are used to the extent TI deems necessary to support this warranty. Except where mandated by applicable law, testing of all parameters of each component is not necessarily performed.

TI assumes no liability for applications assistance or the design of Buyers’ products. Buyers are responsible for their products and applications using TI components. To minimize the risks associated with Buyers’ products and applications, Buyers should provide adequate design and operating safeguards.

TI does not warrant or represent that any license, either express or implied, is granted under any patent right, copyright, mask work right, or other intellectual property right relating to any combination, machine, or process in which TI components or services are used. Information published by TI regarding third-party products or services does not constitute a license to use such products or services or a warranty or endorsement thereof. Use of such information may require a license from a third party under the patents or other intellectual property of the third party, or a license from TI under the patents or other intellectual property of TI.

Reproduction of significant portions of TI information in TI data books or data sheets is permissible only if reproduction is without alteration and is accompanied by all associated warranties, conditions, limitations, and notices. TI is not responsible or liable for such altered documentation. Information of third parties may be subject to additional restrictions.

Resale of TI components or services with statements different from or beyond the parameters stated by TI for that component or service voids all express and any implied warranties for the associated TI component or service and is an unfair and deceptive business practice. TI is not responsible or liable for any such statements.

Buyer acknowledges and agrees that it is solely responsible for compliance with all legal, regulatory and safety-related requirements concerning its products, and any use of TI components in its applications, notwithstanding any applications-related information or support that may be provided by TI. Buyer represents and agrees that it has all the necessary expertise to create and implement safeguards which anticipate dangerous consequences of failures, monitor failures and their consequences, lessen the likelihood of failures that might cause harm and take appropriate remedial actions. Buyer will fully indemnify TI and its representatives against any damages arising out of the use of any TI components in safety-critical applications.

In some cases, TI components may be promoted specifically to facilitate safety-related applications. With such components, TI’s goal is to help enable customers to design and create their own end-product solutions that meet applicable functional safety standards and requirements. Nonetheless, such components are subject to these terms.

No TI components are authorized for use in FDA Class III (or similar life-critical medical equipment) unless authorized officers of the parties have executed a special agreement specifically governing such use.

Only those TI components which TI has specifically designated as military grade or “enhanced plastic” are designed and intended for use in military/aerospace applications or environments. Buyer acknowledges and agrees that any military or aerospace use of TI components which have ***not*** been so designated is solely at the Buyer's risk, and that Buyer is solely responsible for compliance with all legal and regulatory requirements in connection with such use.

TI has specifically designated certain components as meeting ISO/TS16949 requirements, mainly for automotive use. In any case of use of non-designated products, TI will not be responsible for any failure to meet ISO/TS16949.

| **Products** | | **Applications** | |
|---|---|---|---|
| Audio | www.ti.com/audio | Automotive and Transportation | www.ti.com/automotive |
| Amplifiers | amplifier.ti.com | Communications and Telecom | www.ti.com/communications |
| Data Converters | dataconverter.ti.com | Computers and Peripherals | www.ti.com/computers |
| DLP® Products | www.dlp.com | Consumer Electronics | www.ti.com/consumer-apps |
| DSP | dsp.ti.com | Energy and Lighting | www.ti.com/energy |
| Clocks and Timers | www.ti.com/clocks | Industrial | www.ti.com/industrial |
| Interface | interface.ti.com | Medical | www.ti.com/medical |
| Logic | logic.ti.com | Security | www.ti.com/security |
| Power Mgmt | power.ti.com | Space, Avionics and Defense | www.ti.com/space-avionics-defense |
| Microcontrollers | microcontroller.ti.com | Video and Imaging | www.ti.com/video |
| RFID | www.ti-rfid.com | | |
| OMAP Applications Processors | www.ti.com/omap | **TI E2E Community** | e2e.ti.com |
| Wireless Connectivity | www.ti.com/wirelessconnectivity | | |

Mailing Address: Texas Instruments, Post Office Box 655303, Dallas, Texas 75265
Copyright © 2016, Texas Instruments Incorporated